(NASA-CR-4121) SPACE SHUTTLE PHASE B WIND TUNNEL TEST DATABASE Summary Report (Chrysler Corp.) 289 p CSCL 22B

N88-18611

Unclas
H1/16 0123010

NASA Contractor Report 4121

Space Shuttle Phase B Wind Tunnel Test Database

Summary Report

J. L. Glynn and D. E. Poucher
Chrysler Corporation
Military-Public Electronic Systems
Michoud Engineering Office
New Orleans, Louisiana

Prepared for
Langley Research Center
under Contract NAS1-18276

National Aeronautics
and Space Administration

Scientific and Technical
Information Division

1988

ABSTRACT

Archived wind tunnel test data are available for flyback booster or other alternate recoverable configurations as well as reusable orbiters studied during initial development (Phase B) of the Space Shuttle. Considerable wind tunnel data were acquired by the competing contractors and the NASA Centers for an extensive variety of configurations with an array of wing and body planforms.

All contractor and NASA wind tunnel test data acquired in the Phase B development have been compiled into a database and are available for applying to current winged flyback or recoverable booster aerodynamic studies.

The Space Shuttle Phase B Wind Tunnel Database is structured by vehicle component and configuration type. Basic components include the booster, the orbiter and the launch vehicle.

Booster configuration types include straight and delta wings, canard, cylindrical, retro-glide and twin body.

Orbiter configuration types include straight and delta wings, lifting body, drop tanks and double delta wings.

Launch configuration types include booster and orbiter components in various stacked and tandem combinations.

The digital database consists of 220 files of data containing basic tunnel recorded data. Database structure is documented in a series of reports which include configuration sketches for the various planforms tested.

TABLE OF CONTENTS

		PAGE NUMBER
ABSTRACT		i
INDEX OF MODEL FIGURES		3
ACRONYMS FOR TEST FACILITIES AND CONTRACTORS		7
1.0	INTRODUCTION	
	1.1 Space Shuttle Development Phases	8
	1.2 Chrysler's Test Database and Archive System	8
	1.3 Extracting Phase B Test Database Information	10
		12
2.0	COMPILATION OF PHASE B DATABASE ARCHIVE CONTENTS	13
	2.1 Compilation Outline	13
	2.2 Summary Volume	14
	2.3 Model and Test Information	15
	2.4 Digital Database	16
	2.5 Directory File	17
	2.6 Guide to Phase B Database Use	19
TABLES		
1.	CONFIGURATIONS TESTED	
	1.1 AERODYNAMICS	
	1.1.1 BOOSTER	25
	1.1.2 ORBITER	30
	1.1.3 LAUNCH	37
	1.2 AIRLOADS	
	1.2.1 BOOSTER	43
	1.2.2 ORBITER	44
	1.2.3 LAUNCH	45
	1.3 HEAT TRANSFER	
	1.3.1 BOOSTER	46
	1.3.2 ORBITER	48
	1.3.3 LAUNCH	50
2.	SPACE SHUTTLE PHASE B DIGITAL DATABASE	
	2.1 BOOSTER AERODYNAMICS	53
	2.2 ORBITER AERODYNAMICS	55
	2.3 LAUNCH AERODYNAMICS	59
	2.4 LAUNCH AIRLOADS & HEAT TRANSFER	62

TABLE OF CONTENTS (Concluded)

APPENDICES

A) AERODYNAMICS
- A-1 BOOSTER — A-1-1→A-1-43
- A-2 ORBITER — A-2-1→A-2-35
- A-3 LAUNCH — A-3-1→A-3-47

B) AIRLOADS
- B-1 BOOSTER — B-1-1→B-1-6
- B-2 ORBITER — B-2-1→B-2-5
- B-3 LAUNCH — B-3-1→B-3-11

C) HEAT TRANSFER
- C-1 BOOSTER — C-1-1→C-1-10
- C-2 ORBITER — C-2-1→C-2-26
- C-3 LAUNCH — C-3-1→C-3-21

INDEX OF MODEL FIGURES - BOOSTEP

Booster Type	Contractor	Page Number		
		Aerodynamics	Airloads	Heat Transfer
CANARD	MDAC	A-1-1	B-1-1	C-1-1
	MDAC/MMC	A-1-4		
	MSFC	A-1-5		
	TBC	A-1-6		
CYLINDRICAL	GD/C	A-1-7		
	LMSC	A-1-8		
	MDAC	A-1-9		
	MSFC	A-1-10		
	TBC	A-1-13		
DELTA WING	GD/C	A-1-17		C-1-2
	MDAC	A-1-23		
	MMC	A-1-24		
	MSFC	A-1-25		
	TBC	A-1-26		
STRAIGHT WING	GD/C	A-1-28	B-1-3	C-1-8
	MSC	A-1-33		
	TBC	A-1-34		
UNIQUE CONFIGURATIONS	CCSD	A-1-36	B-1-4	
	GD/C	A-1-39		
	LARC	A-1-40		

INDEX OF MODEL FIGURES - ORBITER

Orbiter Type	Contractor	Page Number		
		Aerodynamics	Airloads	Heat Transfer
DELTA BODY	GAC	A-2-1		
	LARC			C-2-1
	LMSC	A-2-3		
DELTA WING	GAC	A-2-5		C-2-2
	LARC	A-2-9		
	LMSC	A-2-14		
	MDAC	A-2-18	B-2-1	C-2-5
	MMC	A-2-23		
	MSC	A-2-25		
	MSFC		B-2-2	
	NR	A-2-26	B-2-3	C-2-8
STRAIGHT WING	MDAC	A-2-29		
	MSC	A-2-30		
	NR	A-2-31	B-2-5	C-2-18
UNIQUE CONFIGURATIONS	GAC	A-2-32		C-2-22
	LARC	A-2-33		C-2-26
	MMC	A-2-34		
	NR	A-2-35		

INDEX OF MODEL FIGURES - LAUNCH

Booster Type	Booster Contractor	Orbiter Type	Orbiter Contractor	Page Number: Aero-dynamics	Airloads	Heat Trns
CANARD	MDAC	DELTA WING	MDAC	A-3-1	B-3-1	C-3-1
	MDAC/MMC		MDAC	A-3-2		
	TBC		GAC	A-3-4		
CANARD	MDAC	STRAIGHT WING	MDAC	A-3-5		
CANARD	MDAC	UNIQUE CONFIG.	MDAC	A-3-6		
CYLINDRICAL	GAC	DELTA WING	GAC			C-3-6
	GD/C		MSC	A-3-8		
	MDAC		MSC	A-3-10		
	MSFC		LMSC	A-3-14	B-3-3	
	MSFC		MSC	A-3-15		
	MSFC		MSFC		B-3-6	
	NR		NR	A-3-18		
	TBC		MSC	A-3-19		
CYLINDRICAL	MSFC	UNIQUE CONFIG.	GAC	A-3-20		
	TBC		GAC			C-3-9
DELTA WING	GD/C	DELTA WING	NR	A-3-22		C-3-13
	MMC		MSC	A-3-23		
	MSC/MDAC		MSC/MDAC	A-3-24		
	TBC		MSC	A-3-25		
DELTA WING	GD/C	STRAIGHT WING	NR			C-3-19
	LARC		MSC			C-3-21
	MDAC		MSC	A-3-27		
	MSC/MDAC		MSC/MDAC	A-3-28		
DELTA WING	GD/C	UNIQUE CONFIG.	NR	A-3-29		
	TBC		MSC	A-3-30		
STRAIGHT WING	GD/C	DELTA WING	NR	A-3-32	B-3-7	
	MSC/MDAC		MSC/MDAC	A-3-33		
STRAIGHT WING	GD/C	STRAIGHT WING	NR	A-3-34	B-3-9	
	MSC		MSC	A-3-35		
	MSC/MDAC		MSC/MDAC	A-3-36		

INDEX OF MODEL FIGURES - LAUNCH

Booster Type	Booster Contractor	Orbiter Type	Orbiter Contractor	Page Number: Aero-dynamics	Page Number: Airloads	Page Number: Heat Trns
STRAIGHT WING	TBC	UNIQUE CONFIG.	GAC	A-3-37	B-3-11	
UNIQUE CONFIG.	LMSC	DELTA BODY	LMSC	A-3-38		
UNIQUE CONFIG.	LARC	DELTA WING	NR	A-3-39		
	TBC		NR	A-3-40		
UNIQUE CONFIG.	TBC	STRAIGHT WING	GAC	A-3-41		
UNIQUE CONFIG.	MMC	UNIQUE CONFIG.	GAC	A-3-42		
	MMC		MMC	A-3-44		
	TBC		GAC	A-3-46		

ACRONYMS FOR TEST FACILITIES AND CONTRACTORS

AEDC	-- ARNOLD ENGINEERING DEVELOPMENT CENTER
ARC	-- AMES RESEARCH CENTER
CAL	-- CORNELL AERONAUTICAL LABORATORY
CCSD	-- CHRYSLER CORP. SPACE DIVISION
GAC	-- GRUMMAN AEROSPACE CORPORATION
GD/C	-- GENERAL DYNAMICS/CONVAIR
JPL	-- JET PROPULSION LABORATORY
L&RC	-- LANGLEY RESEARCH CENTER
LMSC	-- LOCKHEED MISSILES AND SPACE COMPANY
LTV	-- LING TEMCO VOUGHT
MAC	-- McDONNELL AIRCRAFT COMPANY
MDAC	-- McDONNELL DOUGLAS AIRCRAFT CORPORATION
MMC	-- MARTIN MARIETTA CORPORATION
MSC	-- MANNED SPACECRAFT CENTER
MSFC	-- MARSHALL SPACE FLIGHT CENTER
NR	-- NORTH AMERICAN ROCKWELL
NRLAD	-- NORTH AMERICAN ROCKWELL CORP., LOS ANGELES DIVISION
NSRDC	-- NAVAL SHIP RESEARCH AND DEVELOPMENT CENTER
TAM	-- TEXAS A&M
TBC	-- THE BOEING COMPANY
UW	-- UNIVERSITY OF WASHINGTON

1.0 INTRODUCTION

1.1 Space Shuttle Development Phases

Development of the Space Transportation System (STS) encompassed the study of a large number of conceptual designs and an extensive wind tunnel testing program. Phases of the development program are identified as:

Phase A - Concept Feasibility Studies - 1969-1970

Phase B - Preliminary Design Studies - 1970-1972

Phase C/D - Design and Development - 1972-1983

During the Phase A and B periods, completely reusable systems were studied including the "flyback" booster. However, due to the large cost of the completely reusable concept, NASA decided at the end of the Phase B period to employ an expendable booster design. Phase C/D design and development was then concentrated on a two-stage, parallel-burn booster system concept.

In the development stage (Phase B) of Space Shuttle design, extensive wind tunnel data were acquired for a variety of alternate configurations. These data were accumulated, converted into standard formats, placed in a data bank and documented. This work was performed by the Chrysler Corporation Military Public Electronic

Systems, Michoud Engineering Office under contract to NASA/MSFC.

Developmental configurations considered for early Space Shuttle studies were extremely varied. These included winged "flyback boosters," "inline" staged launch vehicles and various "parallel staged" orbiter-booster combinations. Wind tunnel models of the various vehicles were tested both in the launch and entry configurations. Aerodynamics, airloads and heat transfer data were collected and compiled from four major contractors and parallel NASA directed studies. Results were documented individually through a series of NASA technical reports, contractor reports and test reports. The digital data and associated descriptive documentation which were archived have been maintained and are available for ongoing applications.

Current advanced launch vehicle studies are focusing on many of the approaches considered during original Space Shuttle studies. Available wind tunnel data for configurations similar to those currently being evaluated can be highly valuable to the preliminary design engineer.

The archived Phase B data are available to the technical community. Extracts of descriptive information and

configuration sketches, and digital test data have been compiled and are reported herein to facilitate use of the large data bank for booster, orbiter and launch configurations.

1.2 Chrysler's Test Database and Archive System

Extensive Chrysler involvement in wind tunnel data application on NASA programs prior to the Space Shuttle resulted in development of complex computer systems for automating these processes. These processes included automating the management and database functions in addition to automating the engineering data applications and computer graphics. These combined functions were reflected in the name DATAMAN.

The Chrysler developed Data Management System (DATAMAN) was used to develop design applicable aerodynamic data, generate extensive plots and cross plots, document, and database wind tunnel test data from the Space Shuttle Phase B test program under contract to the NASA/MSFC.

Chrysler initiated the DATAMAN project in early 1970 and continued through both the Phase B and Phase C/D test programs. Extensive management procedures were devised to effectivley identify and track the expected large volumes of data to be generated by a number of

contractors, and a variety of Phase B configurations. Hence, a means of conveying descriptive information relative to the configurations and associated data was required

A four digit report identifier was assigned as initial test inputs were made to the DATAMAN system to track and report activities on individual tests. For the Phase B test program, these identifiers were DMS-DR-1001 through DMS-DR-1278. Thus, approximately 278 sets of test results were processed, documented, and databased.

The assignment of identifiers was sequential and they are,therefore, chronological throughout the Phase B configuration management. Many other identifiers are associated with individual tests such as configuration type, NASA series number, test facility designations and contractor(s) involved.

Each test was documented in a DATAMAN test data report, test data were archived in standard DATAMAN formats, and salient tracking information was compiled. All these were disseminated to NASA technical and program management personnel for technical assessment of the data and managing the overall test program.

1.3 Extracting Phase B Test Database Information

The effort involved extracting and compiling Phase B test data contents and descriptive information from the archived test data bank and documentation file. Digital database files contained a mix of basic tunnel recorded data and calculated analysis data used for graphic displays. These files were reduced to basic tunnel data and structured by configuration tested and contractor. A series of catalog reports were assembled to provide a readily accessible overview of test results available for future space transportation system studies.

These catalog reports are in increasing levels of detail. The first level consists of summary tables and selected sketches. These enable the user to scan for possible applications to his ongoing work.

For a promising or likely candidate configuration, the user can proceed to the second level of detail where all available configuration sketches and test conditions are compiled.

The third level of detail is the digital data files where tunnel recorded data reside

2.0 COMPILATION OF PHASE B DATABASE ARCHIVE CONTENTS

2.1 Compilation Outline

Results of the Phase B database compilation are contained in the following list.

1) Summary catalog report, DMS-DR-01, containing an overview of database contents and availability.

2) A three volume catalog report, DMS-DB-02, containing configuration sketches and conditions tested. The three volumes correspond to booster, orbiter and launch test configurations.

3) A series of magnetic data tapes containing available digital files. These are also structured by configuration and are described in transmittal documents DMS-TD-01 through 03, corresponding to booster, orbiter and launch test configurations, respectively.

4) A directory database information file formatted for the R-base relational database system.

Documentation of the contents of the database is contained in two reports: DMS-DB-01 and DMS-DB-02.

2.2 Summary Volume

The first document (DMS-DB-01) is a single volume summary report containing planform sketches of the various configurations tested during the shuttle Phase B program. Tabular information from the directory file is included and is divided by component (booster, orbiter and launch) and by test discipline (aerodynamics, airloads and heat transfer).

Structure of the tables and sketches is by component and test discipline with sorting by configuration and contractor. Each booster and each orbiter configuration tested are assigned a 2-character code for purposes of grouping and sorting.

Those codes are

	Code	General Configuration
Booster -	B1	Canard
	B2	Cylindrical
	B3	Delta Wing
	B4	Straight Wing
	B5	Unique
Orbiter -	01	Delta Body
	02	Delta Wing
	03	Straight Wing
	04	Unique

Launch configurations tested are identified by a combination of the above codes. Test information is also sorted by individual contractors and NASA centers. Acronyms for these contractors and test facilities are presented in the frontispiece.

Table 1 provides a summary of the Phase B database records. It is divided into sections by component and test discipline. These nine sections are then sorted by configuration code and contractor.

Presented in the appendices are selected model figures of the array of configurations tested. Presentation structure is the same as that used in table 1. Where similar configurations were involved in multiple tests, only a representative figure is presented.

2.3 Model and Test Information

The second document (DMS-DB-02) is a three volume report containing extracts from the individual test data reports. All line drawings and collation sheets/run schedules are included. The three volumes correspond to the three component classifications; booster, orbiter, and launch, respectively. A series of tabular information from the directory file is also included.

2.4 Digital Database

The digital database also follows the structure of table 1. Database contents represent data as received from the test facility. However, for some tests an additional, calculated, coefficient schedule is included. These additional schedules are mainly a second axis system or extract data from a multi-balance test. Individual datasets within a file are encoded with the configuration code in the header information.

Test data are stored on five magnetic data tapes. These tapes are 9-track, 6250 FPI, ASCII format. File contents are:

Tape#	Component	#Files	#Datasets	Configuration Codes
1	Booster - Aerodynamics	53	4,216	B1-B5
2	Orbiter - Aerodynamics	89	4,500	01+02
3	Orbiter - Aerodynamics	20	1,962	03+04
4	Launch - Aerodynamics	34	4,034	B1-B3
5	Launch - Aerodynamics	19	637	B4+B5
	- Airloads	4	1,182	ALL
	- Heat Transfer	1	21	ALL
	Total	220	16,552	

Specific test locations on the digital database are shown in Table 2.

2.5 Directory File

The directory data file was constructed to assist in the categorization of test's and to generate tabular reports.

Information was extracted from existing administrative reports and from individual test data reports. The file was created using the R-base relational database system by Microrim. A description of the table information is as follows:

Table: DMS-DR#
Read Password: NO
Modify Password: NO

Column definitions

#	Name	Type	Length (Characters)	Description
1	DR#	TEXT	4	DATAMAN Report Number
2	CR#	TEXT	8	Contractor Report Number
3	TMX#	TEXT	12	NASA TMX Report Number
4	NSN	TEXT	14	NASA Test Series Number
5	#VOL	TEXT	1	Number of Report Volumes
6	VOL#	TEXT	1	Report Volume Number
7	PUB.DATE	TEXT	13	Report Publication Date
8	LINE#	TEXT	1	Print Key for Tabular Report
9	TESTTYPE	TEXT	15	Test Discipline
10	COMP	TEXT	7	Test Component
11	BCC	TEXT	3	Booster Configuration Code
12	OCC	TEXT	3	Orbiter Configuration Code
13	B-CODE	TEXT	15	Booster Classification
14	B-CONTRA	TEXT	10	Booster Model Contractor
15	O-CODE	TEXT	15	Orbiter Classification
16	O-CONTRA	TEXT	10	Orbiter Model Contractor
17	FAC	TEXT	5	Test Facility
18	TUN	TEXT	6	Test Wind Tunnel
19	TEST#	TEXT	15	Facility Test Number
20	FAC-TST#	TEXT	26	Facility, Tunnel, Facility Test Number
21	MACH	TEXT	15	Mach Number Range
22	SCALE	TEXT	12	Model Scale
23	DMS-CODE	TEXT	6	Two Character Dataset Identifier
24	B-TYPE	TEXT	23	Booster Configuration Type
25	O-TYPE	TEXT	33	Orbiter Configuration Type
26	CONFIG	TEXT	220	Description of Configurations Tested
27	PURPOSE	TEXT	150	Major Test Purpose
28	TITLE	TEXT	250	Data Report Title
29	PROJ.ENG	TEXT	175	Contractor/NASA Test Engineers
30	DMS-ENG	TEXT	30	DATAMAN Cognizant Engineers
31	COMMENTS	TEXT	150	Directory File Comments/Exceptions

Current number of rows: 488

2.6 Guide to Phase B Database Use

Users of the Chrysler Phase B database have varying levels of detail available for review. A typical application is to investigate similarities between current preliminary configuration designs and configurations tested during Phase B. As an example, current applications may be representative of a winged flyback booster with canards. To research this configuration the user could follow the steps illustrated below:

Step 1 - DMS-DB-01, Summary Report: This report would be reviewed to identify configurations of interest and corresponding configuration types and contractors.

INDEX OF MODEL FIGURES - BOOSTER

Booster Type	Contractor	PAGE NUMBER Aerodynamics	Airloads	Heat Transfer
CANARD	MDAC	A-1-1	B-1-1	C-1-1
	MDAC/MMC	A-1-4		
	MSFC	A-1-5		
	TBC	A-1-6		
CYLINDRICAL	GD/C	A-1-7		
	LMSC	A-1-8		
	MDAC			

Step 2 - Table 1, DMS-DB-01, Summary Report: Using the configuration type and contractors identified above, a list of applicable tests is obtained.

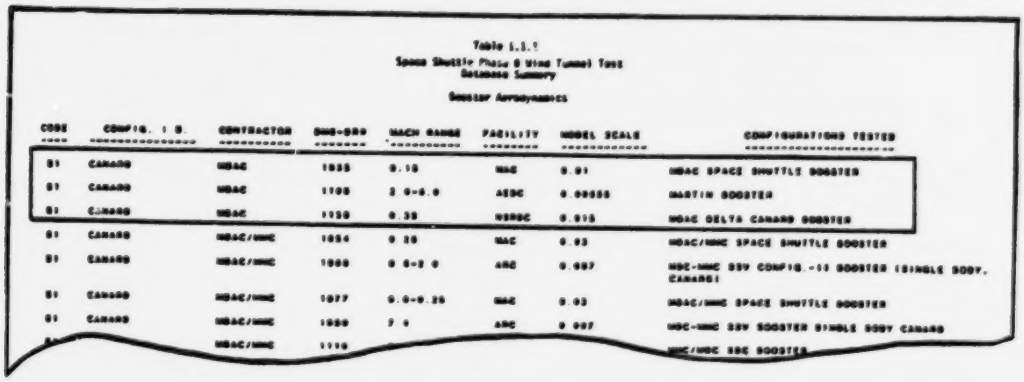

Table 1.1.1
Space Shuttle Phase B Wind Tunnel Test
Database Summary

Booster Aerodynamics

CODE	CONFIG. I.D.	CONTRACTOR	DMS-DR#	MACH RANGE	FACILITY	MODEL SCALE	CONFIGURATIONS TESTED
B1	CANARD	MDAC	1035	0.15	MAC	0.01	MDAC SPACE SHUTTLE BOOSTER
B1	CANARD	MDAC	1108	2.0-6.0	AEDC	0.00035	MARTIN BOOSTER
B1	CANARD	MDAC	1139	0.35	NSPDC	0.015	MDAC DELTA CANARD BOOSTER
B1	CANARD	MDAC/MMC	1054	0.25	MAC	0.03	MDAC/MMC SPACE SHUTTLE BOOSTER
B1	CANARD	MDAC/MMC	1066	0.6-2.0	ARC	0.007	MDC-MMC SSV CONFIG.-11 BOOSTER (SINGLE BODY, CANARD)
B1	CANARD	MDAC/MMC	1077	0.6-0.25	MAC	0.03	MDAC/MMC SPACE SHUTTLE BOOSTER
B1	CANARD	MDAC/MMC	1080	2.6	ARC	0.007	MDC-MMC SSV BOOSTER SINGLE BODY CANARD
		MDAC/MMC	1116				MMC/MDC SSC BOOSTER

Step 3 - DMS-DB-02, Vol.1, Booster Configuration: Locate the model sketches and test conditions and parameters.

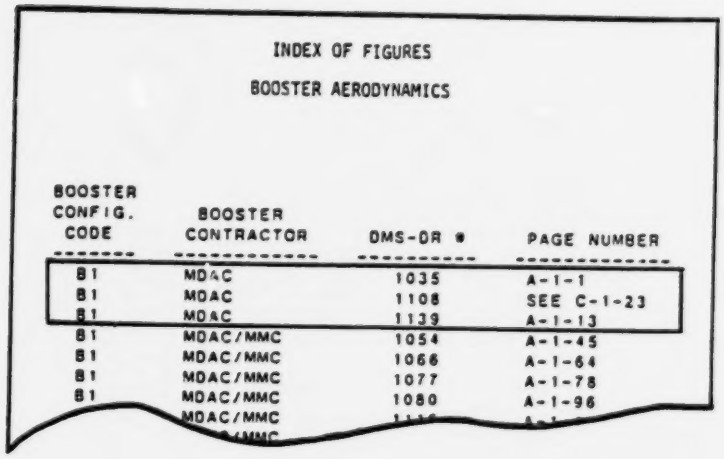

INDEX OF FIGURES

BOOSTER AERODYNAMICS

BOOSTER CONFIG. CODE	BOOSTER CONTRACTOR	DMS-DR #	PAGE NUMBER
B1	MDAC	1035	A-1-1
B1	MDAC	1108	SEE C-1-23
B1	MDAC	1139	A-1-13
B1	MDAC/MMC	1054	A-1-45
B1	MDAC/MMC	1066	A-1-64
B1	MDAC/MMC	1077	A-1-78
B1	MDAC/MMC	1080	A-1-96
	MDAC/MMC	1116	A-1-
	MMC		

Step 4a- Dataset/Run Number Collation Summary: Examine collation sheets to determine test Mach range, angle of attack/sideslip ranges, configurations and control surfaces/parametric conditions.

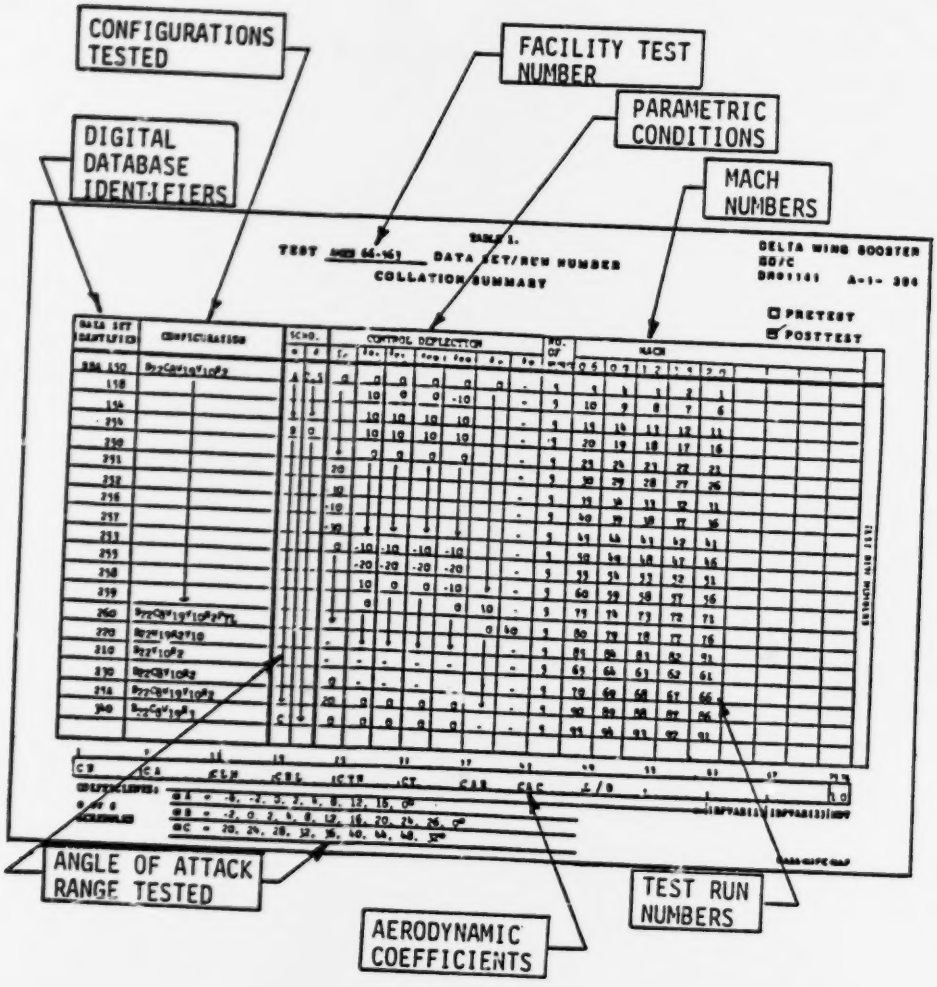

Step 4b- Configuration Sketches: Examine configuration sketches to obtain model and aerodynamic details such as model dimensions, wing type, canard surfaces, tail surfaces, body shape, etc.

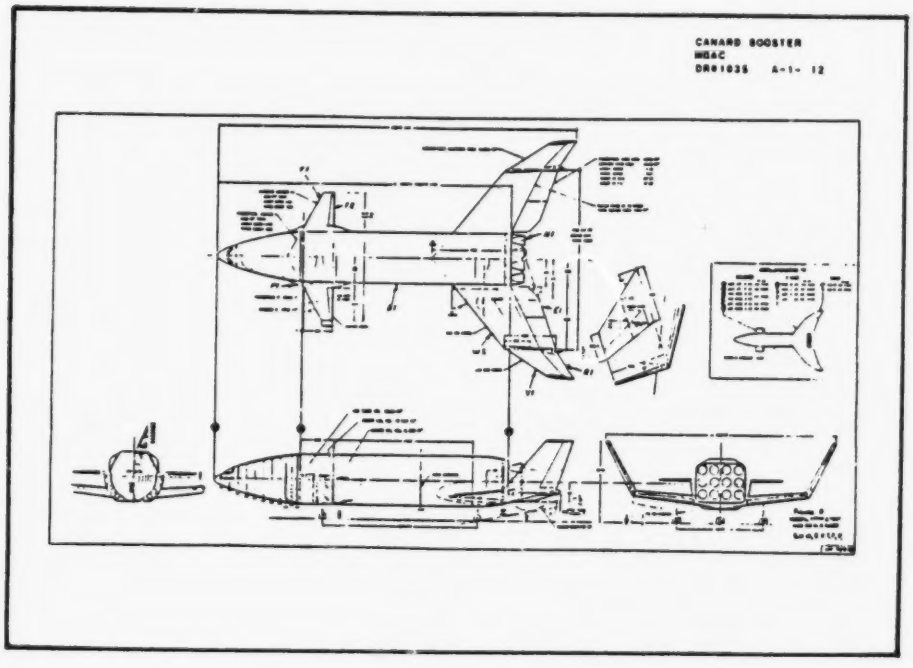

ORIGINAL PAGE IS
OF POOR QUALITY

ORIGINAL PAGE IS
OF POOR QUALITY

Step 5 - Table 2, DMS-DB-02, Vol.1; Refer to table to determine publication availability: data report, contractor report or NASA publication.

Table 2
Space Shuttle Phase B Wind Tunnel
Test Database Listed by Chrysler
DATAMAN Report Number

DMS-DB#	NASA SERIES NUMBER	VOLUME NUMBER	NASA CR NUMBER	NASA TM-X NUMBER	FACILITY TEST NUMBER	VEHICLE COMPONENT
1001	S1002-S1001	1	103.159	--	MSFC 14TWT 451	BOOSTER
1002	S0006	1	--	82.035	ARC 2.5HWT 75	ORBITER
1033						BOOSTER
1034	S0232	1	103.160	--	NRLAB LSWT 632	ORBITER
1035	S0404	1	103.191	--	MAC LSWT 1351	BOOSTER
1036	H0401-H0403	1	--	--	LARC.SVDHT 147-179,206-332	LAUNCH
			--	--	LARC SVDHT 147-179,206-332	BOOSTER

Step 6 - Test Documentation; Refer to test documentation to obtain test procedures, model description and data presentation.

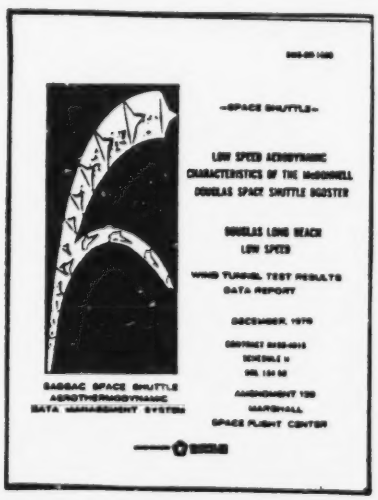

Step 7 - Digital Database. Table 2 in DMS-DB-01 (Table 6 in DMS-DB-02): the user, after determining applicability, can access the test data from the digital database files for further analysis and application.

TABLE 2.1

SPACE SHUTTLE PHASE B
DIGITAL DATABASE
BOOSTER AERODYNAMICS

FILE #	BCC	B-CONTRA	DR#	2-CHAR. CODE	# D/S's	# RECORDS
1	B1	MDAC	1035	CC	69	967
2			1130	NZ	574	8037
3		MDAC/MMC	1054	CE	208	2185
4			1066	AD	86	1033
5			1077	CØ	96	1057

Table 1.1.1
Space Shuttle Phase B Wind Tunnel Test
Database Summary

Booster Aerodynamics

CODE	CONFIG. I.D.	CONTRACTOR	DMS-DR#	MACH RANGE	FACILITY	MODEL SCALE	CONFIGURATIONS TESTED
B1	CANARD	MDAC	1035	0.18	MAC	0.01	MDAC SPACE SHUTTLE BOOSTER
B1	CANARD	MDAC	1108	2.0-6.0	AEDC	0.00556	MARTIN BOOSTER
B1	CANARD	MDAC	1139	0.38	NSRDC	0.015	MDAC DELTA CANARD BOOSTER
B1	CANARD	MDAC/MMC	1054	0.26	MAC	0.03	MDAC/MMC SPACE SHUTTLE BOOSTER
B1	CANARD	MDAC/MMC	1066	0.6-2.0	ARC	0.007	MDC-MMC SSV CONFIG.-14 BOOSTER (SINGLE BODY, CANARD)
B1	CANARD	MDAC/MMC	1077	0.0-0.26	MAC	0.03	MDAC/MMC SPACE SHUTTLE BOOSTER
B1	CANARD	MDAC/MMC	1080	7.4	ARC	0.007	MDC-MMC SSV BOOSTER SINGLE BODY CANARD
B1	CANARD	MDAC/MMC	1116	0.6-2.0	ARC	0.007	MMC/MDC SBC BOOSTER
B1	CANARD	MDAC/MMC	1117	2.3-4.6	LARC	0.007	MDAC/MMC HCR DELTA WING ORBITER, MDAC/MMC SBC BOOSTER
B1	CANARD	MDAC/MMC	1120	0.26	MAC	0.03	MDAC/MMC BOOSTER
B1	CANARD	MDAC/MMC	1190	0.25	LARC	0.0032	MDAC/MMC 256-14 BOOSTER, MDAC 00508 ORBITER, NAR/GDC B-15B-1 BOOSTER, NAR 134D ORBITER
B1	CANARD	MSFC	1164	0.4-1.25	NSRDC	0.015	MSFC PARAMETRIC BOOSTER
B1	CANARD	MSFC	1192	0.4-1.2	NSRDC	0.015	MSFC PARAMETRIC BOOSTER
B1	CANARD	MSFC	1212	0.4-1.1	CAL	0.015	MSFC PARAMETRIC BOOSTER
B1	CANARD	TBC	1148	0.6-5.0	MSFC	0.002456	TBC AR11981-1 BOOSTER WITH GAC G3-A ORBITER, BOEING AR11981-1 BOOSTER
B1	CANARD	TBC	1160	0.6-5.0	MSFC	0.002456	BOEING AR-11981-3 BOOSTER
B2	CYLINDRICAL	GD/C	1204	0.6-5.0	MSFC	0.003366	GD/C B19B BOOSTER WITH MSC 040A ORBITER, GD/C B19B BOOSTER
B2	CYLINDRICAL	GD/C	1210	0.9-4.96	MSFC	0.003366	TWIN PRESSURE FED BOOSTER WITH MSC 040A ORBITER, GD/C B-18E-2 BOOSTER, GD/C B-18E-3 BOOSTER
B2	CYLINDRICAL	LMSC	1242	1.96-4.96	MSFC	0.00227	NASA/MSFC PARAMETRIC BOOSTER

ORIGINAL PAGE IS
OF POOR QUALITY

Table 1.1.1 - Continued

Space Shuttle Phase B Wind Tunnel Test
Database Summary

Booster Aerodynamics

CODE	CONFIG. I.D.	CONTRACTOR	DMS-DR#	MACH RANGE	FACILITY	MODEL SCALE	CONFIGURATIONS TESTED
B2	CYLINDRICAL	MDAC	1230	0.6-4.5	MDAC	0.008	PARALLEL BURN PRESSURE FED AND SRM BOOSTERS, 040A ORBITER
B2	CYLINDRICAL	MSFC	1208	0.6-5.0	MSFC	0.003366	MSFC PRESSURE FED BOOSTER
B2	CYLINDRICAL	MSFC	1226	0.9-4.96	MSFC	0.003366	MSFC PRESSURE FED BOOSTER
B2	CYLINDRICAL	MSFC	1240	0.9-4.96	MSFC	0.0028	MSFC PRESSURE FED BOOSTER
B2	CYLINDRICAL	MSFC	1245	0.9-4.96	MSFC	0.0034	MSFC PUMP-FED BOOSTER
B2	CYLINDRICAL	MSFC	1253	0.6-4.0	MSFC	0.00513	156 INCH SOLID ROCKET MOTOR
B2	CYLINDRICAL	TBC	1128	1.5-4.0	TBC	0.0144	TBC 979-185 SOLID ROCKET MOTOR
B2	CYLINDRICAL	TBC	1214	6.0	LARC	0.0035	TBC PRESSURE FED BOOSTER
B2	CYLINDRICAL	TBC	1227	0.6-4.96	MSFC	0.003366	PRESSURE FED BOOSTER WITH MSC 040A ORBITER, PRESSURE FED BOOSTER
B2	CYLINDRICAL	TBC	1228	0.6-1.1	TBC	0.008899	TBC RECOVERABLE BALLISTIC BOOSTER
B2	CYLINDRICAL	TBC	1228	2.0-4.0	TBC	0.008899	TBC RECOVERABLE BALLISTIC BOOSTER
B2	CYLINDRICAL	TBC	1275	0.35-1.1	TBC	0.008899	PRESSURE FED RECOVERABLE BOOSTER 979-160
B2	CYLINDRICAL	TBC	1275	0.35-1.1	TBC	0.008899	PRESSURE FED RECOVERABLE BOOSTER 979-160
B2	CYLINDRICAL	TBC	1275	1.3-4.0	TBC	0.008899	PRESSURE FED RECOVERABLE BOOSTER 979-160
B2	CYLINDRICAL	TBC	1275	1.3-4.0	TBC	0.008899	PRESSURE FED RECOVERABLE BOOSTER 979-160
B2	CYLINDRICAL	TBC	1276	0.6-1.1	TBC	0.006944	PRESSURE FED RECOVERABLE BOOSTER 979-160
B2	CYLINDRICAL	TBC	1276	1.3-4.0	TBC	0.006944	PRESSURE FED RECOVERABLE BOOSTER 979-160
B3	DELTA WING	GD/C	1029	8.05	GDC	0.0035	MODIFIED CONVAIR (B-8B) SPACE SHUTTLE BOOSTER
B3	DELTA WING	GD/C	1030	.184-.318	GDC	0.0175	GD/C SPACE SHUTTLE BOOSTER (STRAIGHT WING), GD/C DELTA WING BOOSTER
B3	DELTA WING	GD/C	1039	.184-.259	GDC	0.0175	GD/C BOOSTER

Table 1.1.1 - Continued

Space Shuttle Phase B Wind Tunnel Test
Database Summary

Booster Aerodynamics

CODE	CONFIG. I.D.	CONTRACTOR	DMS-DR#	MACH RANGE	FACILITY	MODEL SCALE	CONFIGURATIONS TESTED
B3	DELTA WING	GD/C	1052	1.1-1.6	GDC	0.0035	GD/C STRAIGHT WING BOOSTER (B8X), GD/C DELTA WING BOOSTER (B-9J), NAR STRAIGHT WING ORBITER (130G), NAR DELTA WING ORBITER (134B)
B3	DELTA WING	GD/C	1087	0.2-0.3	LARC	0 0076	GD/C BOOSTER B15B-1
B3	DELTA WING	GD/C	1093	10.0	LARC	0 0035	GD/C BOOSTER
B3	DELTA WING	GD/C	1102	0.6-5.0	MSFC	0.0035	GD/C BOOSTER B-15B-1
B3	DELTA WING	GD/C	1108	0.2	GDC	0 0175	GD BOOSTER B-15B WITH MODS
B3	DELTA WING	GD/C	1110	0.2	GDC	0 0175	GD BOOSTER B-15B-1
B3	DELTA WING	GD/C	1121	0.6-2.0	ARC	0.0076	GD/C BOOSTER B-15B-1
B3	DELTA WING	GD/C	1130	0 6-5 0	MSFC	0.0035	NR/GD DELTA WING BOOSTER, NR 134D DELTA WING ORBITER
B3	DELTA WING	GD/C	1141	0.6-2.0	ARC	0 0076	GD/C B-9U BOOSTER
B3	DELTA WING	GD/C	1150	0.22- 253	LARC	0.0076	GD/C BOOSTER B-9U
B3	DELTA WING	GD/C	1152	0.6-4.96	MSFC	0.0035	GD/C B-9U BOOSTER
B3	DELTA WING	GD/C	1155	1.2-4.96	MSFC	0.0035	GD/C BOOSTER B-15B-1
B3	DELTA WING	GD/C	1156	10.0	LARC	0.0035	GD-C B-9U BOOSTER
B3	DELTA WING	GD/C	1162	0 6-4.96	MSFC	0.0031	NR/GD DELTA WING BOOSTER B-15B-1 WITH REUSABLE NUCLEAR STAGE, NAR/GD REUSABLE NUCLEAR STAGE, NAR/GD B-15B-1 DELTA WING BOOSTER
B3	DELTA WING	GD/C	1190	0.25	LARC	0.0029	MDAC/MMC 256-14 BOOSTER, MDAC 0050B ORBITER, NAR/GDC B-15B-1 BOOSTER, NAR 134D ORBITER
B3	DELTA WING	GD/C	1210	0.9-4.96	MSFC	0.0035	TWIN PRESSURE FED BOOSTER WITH MSC 040A ORBITER, GD/C B-18E-2 BOOSTER, GD/C B-18E-3 BOOSTER
B3	DELTA WING	GD/C	1223	0.2	GDC	0.02	GD/C B-18E3 BOOSTER
B3	DELTA WING	GD/C	1237	1 6-2.16	LARC	0.0056	GD/C B9U BOOSTER WITH NR 134D ORBITER, GD/C B9U BOOSTER, NR 134D ORBITER

ORIGINAL PAGE IS
OF POOR QUALITY

Table 1.1.1 - Continued

Space Shuttle Phase B Wind Tunnel Test
Database Summary

Booster Aerodynamics

CODE	CONFIG I.D.	CONTRACTOR	DMS-DR#	MACH RANGE	FACILITY	MODEL SCALE	CONFIGURATIONS TESTED
B3	DELTA WING	MDAC	1014	0 18	MAC	0.01	M/DAC DELTA WING BOOSTER
B3	DELTA WING	MMC	1213	0 6-4.96	MSFC	0.0034	MMC RETRO-GLIDE BOOSTER WITH MSC 040A ORBITER, MMC RETRO-GLIDE BOOSTER
B3	DELTA WING	MSC	1115	0.6-1 4	LTV	0 008105	MSC S-13A ORBITER, MSC SB-13A BOOSTER
B3	DELTA WING	MSC/MDAC	1038	0 6-2.0	ARC	0.08	MSC/MDAC STRAIGHT WING BOOSTER, MSC/MDAC STRAIGHT AND DELTA WING ORBITERS, MSC/MDAC DELTA WING BOOSTER
B3	DELTA WING	MSFC	1001	0 3-5 0	MSFC	0.0035	MSFC BOOSTER (B-005)
B3	DELTA WING	TBC	1183	0 6-4.96	MSFC	0.003366	TBC RS-IC BOOSTER WITH MSC 040A ORBITER, TBC RS-IC BOOSTER
B3	DELTA WING	TBC	1209	0 6-4.96	MSFC	0.003366	AR 12161-2 BOOSTER
B3	DELTA WING	TBC	1220	6.0	LARC	0.0035	TBC FLYABLE LOX/RP BOOSTER
B4	STRAIGHT WING	GD/C	1025	0.9-4.6	GDC	0.0035	GD/CONVAIR (B-8B) BOOSTER
B4	STRAIGHT WING	GD/C	1029	8 05	GDC	0 0035	MODIFIED CONVAIR (B-8B) SPACE SHUTTLE BOOSTER
B4	STRAIGHT WING	GD/C	1030	.184-.318	GDC	0.0175	GD/C SPACE SHUTTLE BOOSTER (STRAIGHT WING), GD/C DELTA WING BOOSTER
B4	STRAIGHT WING	GD/C	1039	.184-.259	GDC	0 0175	GD/C BOOSTER
B4	STRAIGHT WING	GD/C	1050	0.6-2.0	ARC	0.0076	NAR/GD STRAIGHT WING BOOSTER WITH NAR/GD STRAIGHT WING AND DELTA WING ORBITERS, NAR/GD STRAIGHT WING BOOSTER
B4	STRAIGHT WING	GD/C	1051	0.6-2.0	MSFC	0.0035	NAR-GD/C STRAIGHT WING BOOSTER (B-8H MODIFIED), NAR-GD/C STRAIGHT WING ORBITER (130G), NAR-GD/C DELTA WING ORBITER (134B)
B4	STRAIGHT WING	GD/C	1052	1.1-1 6	GDC	0 0035	GD/C STRAIGHT WING BOOSTER (B8X), GD/C DELTA WING BOOSTER (B-9J), NAR STRAIGHT WING ORBITER (130G), NAR DELTA WING ORBITER (134B)
B4	STRAIGHT WING	GD/C	1075	0 6-2 0	ARC	0.0076	GD/C B-811-1 BOOSTER, NAR ORBITER
B4	STRAIGHT WING	GD/C	1100	0.25	LARC	0.0076	GD/C B-8H-1 BOOSTER

ORIGINAL PAGE IS
OF POOR QUALITY

Table 1.1.1 - Concluded

Space Shuttle Phase B Wind Tunnel Test
Database Summary

Booster Aerodynamics

CODE	CONFIG. I.D.	CONTRACTOR	DMS-DR#	MACH RANGE	FACILITY	MODEL SCALE	CONFIGURATIONS TESTED
B4	STRAIGHT WING	MSC	1033	.259	TAM	0.0132	MSC 251 BOOSTER MODEL SB-15
B4	STRAIGHT WING	MSC/MDAC	1038	0.6-2.0	ARC	0.08	MSC/MDAC STRAIGHT WING BOOSTER, MSC/MDAC STRAIGHT AND DELTA WING ORBITERS, MSC/MDAC DELTA WING BOOSTER
B4	STRAIGHT WING	TBC	1079	0.10-0.29	UW	0.02992	BOEING BOOSTER
B4	STRAIGHT WING	TBC	1111	0.3-2.0	ARC	0.00667	BAC H-32 BOOSTER
B4	STRAIGHT WING	TBC	1158	8.12	GAC	0.00435	BOEING H-32 BOOSTER
B4	STRAIGHT WING	TBC	1191	0.3-1.1	TBC	0.00667	BOEING H-32 BOOSTER
B5	UNIQUE CONFIGS.	CCSD	1046	0.4-2.0	ARC	0.0055	CCSD SERV 1
B5	UNIQUE CONFIGS	CCSD	1068	2.6-4.64	LARC	0.0055	CCSD SERV VEHICLE
B5	UNIQUE CONFIGS.	CCSD	1089	0.4-2.0	ARC	0.0055	SERV ASCENT VEHICLE WITH PERSONNEL MODULE, SERV ASCENT VEHICLE WITH WINGED ORBITER, SERV REENTRY VEHICLE
B5	UNIQUE CONFIGS.	CCSD	1089	2.6-4.64	LARC	0.0055	SERV ASCENT VEHICLE WITH PERSONNEL MODULE, SERV ASCENT VEHICLE WITH WINGED ORBITER, SERV REENTRY VEHICLE
B5	UNIQUE CONFIGS.	GD/C	1006	10	AEDC	0.0182	SAMSO-GD/CONVAIR T-18 BOOSTER
B5	UNIQUE CONFIGS.	LARC	1015	0.22-0.35	LARC	NONE	TWIN BODY BOOSTER
B5	UNIQUE CONFIGS.	LARC	1017	1.5-2.86	LARC	NONE	TWIN BODY BOOSTER
B5	UNIQUE CONFIGS.	LARC	1019	3.95-4.63	LARC	NONE	TWIN BODY BOOSTER
B5	UNIQUE CONFIGS.	LARC	1193	0.25	LARC	NONE	LARC LOW FINENESS RATIO BOOSTER
B5	UNIQUE CONFIGS.	LARC	1197	1.5-2.16	LARC	0.0076	LARC LOW FINENESS RATIO BOOSTER WITH NAR 134D ORBITER, NASA LOW FINENESS RATIO BOOSTER
B5	UNIQUE CONFIGS.	LARC	1198	10.2	LARC	NONE	LARC LOW FINENESS RATIO BOOSTER WITH NAR 134D ORBITER, LARC LOW FINENESS RATIO BOOSTER
B5	UNIQUE CONFIGS.	LARC	1200	0.4-1.2	LARC	0.0076	LOW FINENESS RATIO BOOSTER WITH NAR 134D ORBITER, LOW FINENESS RATIO BOOSTER

ORIGINAL PAGE IS
OF POOR QUALITY

Table 1.1.2

Space Shuttle Phase B Wind Tunnel Test
Database Summary

Orbiter Aerodynamics

CODE	CONFIG. I.D.	CONTRACTOR	DMS-DR#	MACH RANGE	FACILITY	MODEL SCALE	CONFIGURATIONS TESTED
01	DELTA BODY	GAC	1005	0.2	GAC	0.025	GAC III A CONFIGURATION EARTH ORBITING SHUTTLE
01	DELTA BODY	LMSC	1103	2.3-4.60	LARC	0.01	LMSC DELTA LIFTING BODY ORBITER
01	DELTA BODY	LMSC	1147	0.2	LARC	0.03	LMSC DELTA BODY ORBITER
01	DELTA BODY	LMSC	1157	0.25	LARC	0.01	LMSC DELTA BODY ORBITER
01	DELTA BODY	LMSC	1169	0.05-0.28	LARC	0.01	LMSC DELTA BODY ORBITER
02	DELTA WING	GAC	1053	0.17	GAC	0.025	GAC IIF EARTH ORBITING SHUTTLE
02	DELTA WING	GAC	1081	0.17	GAC	0.04	GAC ROS-NB1 ORBITER, GAC ROS-WB1 ORBITER
02	DELTA WING	GAC	1142	0.17	GAC	0.04	GAC ROS-NB1 ORBITER, GAC ROS-NB2 DELTA WING ORBITER, GAC ROS-WB1 ORBITER
02	DELTA WING	GAC	1159	10.0	GAC	0.005	GAC DELTA WING ORBITER ROS-NB1, GAC DELTA WING ORBITER ROS-WB1
02	DELTA WING	GAC	1161	0.7-1.16	GAC	0.005	GAC DELTA WING ORBITER ROS-NB1, GAC DELTA WING ORBITER ROS-WB1
02	DELTA WING	GAC	1163	1.75-2.48	GAC	0.005	GAC DELTA WING ORBITER ROS-NB1
02	DELTA WING	GAC	1167	0.17	GAC	0.004	GAC H-33 ORBITER
02	DELTA WING	GAC	1184	0.6-4.96	MSFC	0.003366	GAC H-33 ORBITER
02	DELTA WING	GAC	1189	0.25	LARC	0.0148	GAC H-33 ORBITER
02	DELTA WING	GAC	1194	10.2	LARC	0.005854	GAC ORBITER H-33
02	DELTA WING	GAC	1195	0.6-1.2	LARC	0.0148	GAC H-33 ORBITER
02	DELTA WING	GAC	1196	1.6-2.16	LARC	0.0148	GD/C H-33 ORBITER (ENTRY CONFIGURATION)
02	DELTA WING	GAC	1203	5.0	LARC	0.005854	GAC H-33 ORBITER
02	DELTA WING	GAC	1211	20.3	LARC	0.003366	GAC H-33 ORBITER
02	DELTA WING	GAC	1211	20.3	LARC	0.005854	GAC H-33 ORBITER
02	DELTA WING	GAC	1216	2.3-4.63	LARC	0.0148	GAC H-33 ORBITER
02	DELTA WING	GAC	1239	0.25	LARC	0.0148	GAC H-33 ORBITER

ORIGINAL PAGE IS
OF POOR QUALITY

Table 1.1.2 - Continued
Space Shuttle Phase B Wind Tunnel Test
Database Summary

Orbiter Aerodynamics

CODE	CONFIG. I.D	CONTRACTOR	DMS-DR#	MACH RANGE	FACILITY	MODEL SCALE	CONFIGURATIONS TESTED
02	DELTA WING	LARC	1123	10.4	LARC	NONE	PARAMETRIC DELTA WING ORBITER
02	DELTA WING	LARC	1168	0.21-0.26	LARC	NONE	PARAMETRIC DELTA WING ORBITER
02	DELTA WING	LARC	1199	2.01	LARC	NONE	PARAMETRIC DELTA WING ORBITER
02	DELTA WING	LARC	1229	0.21-0.26	LARC	NONE	PARAMETRIC DELTA WING ORBITER
02	DELTA WING	LARC	1232	0.25	LARC	NONE	LARC PARAMETRIC DELTA WING ORBITER
02	DELTA WING	LARC	1232	1.5-2.16	LARC	NONE	LARC PARAMETRIC DELTA WING ORBITER
02	DELTA WING	LARC	1233	.254	LARC	0.0186	LARC PARAMETRIC DELTA WING ORBITER
02	DELTA WING	LARC	1235	1.5-2.16	LARC	NONE	LARC PARAMETRIC DELTA WING ORBITER
02	DELTA WING	LARC	1268	0.25	LARC	0.01875	DOUBLE DELTA WING ORBITER
02	DELTA WING	LARC	1270	20.3	LARC	0.004	DOUBLE DELTA WING ORBITER
02	DELTA WING	LARC	1277	10.3	LARC	0.01	DOUBLE DELTA WING ORBITER
02	DELTA WING	LMSC	1153	0.4-4.96	MSFC	0.0033	LMSC ORBITER
02	DELTA WING	LMSC	1201	0.6-4.96	MSFC	0.0033	MSFC/LMSC ORBITER
02	DELTA WING	LMSC	1201	0.6-4.96	MSFC	0.0033	MSFC/LMSC ORBITER
02	DELTA WING	LMSC	1254	0.6-4.96	MSFC	0.004	NASA DOUBLE DELTA ORBITER
02	DELTA WING	MDAC	1028	0.7-2.0	ARC	0.007	MDAC ORBITER (LCR), MDAC ORBITER (HCR)
02	DELTA WING	MDAC	1040	0.17-0.27	MAC	0.04	MDC STS ORBITER (02) HIGH CROSS RANGE
02	DELTA WING	MDAC	1041	0.25	MAC	0.04	MDC STS ORBITER (02) HIGH CROSS RANGE
02	DELTA WING	MDAC	1067	0.26	MAC	0.04	MDAC PHASE B SHUTTLE STS ORBITER (02)
02	DELTA WING	MDAC	1071	7.4	ARC	0.0070	MDAC DELTA WING ORBITER
02	DELTA WING	MDAC	1072	7.4	ARC	0.007	MDAC STRAIGHT WING ORBITER, MDAC DELTA WING ORBITER
02	DELTA WING	MDAC	1074	0.18	MAC	0.01333	M/D GENERIC HIGH CROSS RANGE ORBITER
02	DELTA WING	MDAC	1083	1.6-2.0	ARC	0.007	MDAC DELTA WING ORBITER

ORIGINAL PAGE IS
OF POOR QUALITY

Table 1.1.2 - Continued

Space Shuttle Phase B Wind Tunnel Test
Database Summary

Orbiter Aerodynamics

CODE	CONFIG. I.D.	CONTRACTOR	DMS-DR#	MACH RANGE	FACILITY	MODEL SCALE	CONFIGURATIONS TESTED
02	DELTA WING	MDAC	1086	20.3	LARC	0.0033	MDAC BASELINE DELTA WING ORBITER
02	DELTA WING	MDAC	1094	7.4	ARC	0.0076	MDC DELTA WING ORBITER
02	DELTA WING	MDAC	1108	2.0-6.0	AEDC	0.00656	MDAC ORBITER
02	DELTA WING	MDAC	1117	2.3-4.6	LARC	0.007	MDAC/MMC HCR DELTA WING ORBITER, MDAC/MMC SBC BOOSTER
02	DELTA WING	MDAC	1149	0.25	LARC	0.0133	MDAC DELTA WING ORBITER
02	DELTA WING	MDAC	1151	10.3	LARC	0.00555	MDAC BASELINE DELTA WING ORBITER
02	DELTA WING	MDAC	1171	0.4-1.2	LARC	0.007	MDC DELTA WING ORBITER
02	DELTA WING	MDAC	1171	2.0	LARC	0.007	MDC DELTA WING ORBITER
02	DELTA WING	MDAC	1172	0.25	LARC	0.007	MDAC DELTA WING ORBITER
02	DELTA WING	MDAC	1173	1.6-2.86	LARC	0.0133	MDAC DELTA WING ORBITER (050-B)
02	DELTA WING	MDAC	1175	2.01	LARC	0.00555	MDAC DELTA WING ORBITER (0150-B)
02	DELTA WING	MDAC	1190	0.25	LARC	0.0032	MDAC/MMC 256-14 BOOSTER, MDAC 0050B ORBITER, NAR/GDC B-15B-1 BOOSTER, NAR 134D ORBITER
02	DELTA WING	MMC	1003	0.4-4.95	MSFC	0.0038	MMC PHASE A SPACE SHUTTLE MODIFIED ORBITER
02	DELTA WING	MMC	1009	20.6	LARC	NONE	MARTIN-MARIETTA CORP. MODIFIED ORBITER
02	DELTA WING	MMC	1013	0.38	LARC	NONE	MODIFIED SEPT. 1969 BASELINE MARTIN ORBITER FR5-2A
02	DELTA WING	MMC	1022	0.40-0.89	LARC	0.01279	MODIFIED MARTIN ORBITER FR5-2A
02	DELTA WING	MMC	1023	6.0	LARC	0.00588	MODIFIED MARTIN ORBITER
02	DELTA WING	MMC	1045	0.28	LARC	NONE	MODIFIED MARTIN ORBITER FR5-2A
02	DELTA WING	MMC	1048	6.0	LARC	0.00588	MMC MODIFIED ORBITER
02	DELTA WING	MMC	1059	20.6	LARC	NONE	MODIFIED MARTIN MARIETTA DELTA WING ORBITER
02	DELTA WING	MMC	118[illegible]	0.6-3.48	MSFC	0.0043	MMC TITAN III L BOOSTER WITH MMC DTO-7 ORBITER, MMC DTO-7 ORBITER

Table 1.1.2 - Continued

Space Shuttle Phase B Wind Tunnel Test
Database Summary

Orbiter Aerodynamics

CODE	CONFIG. I.D.	CONTRACTOR	DMS-DR#	MACH RANGE	FACILITY	MODEL SCALE	CONFIGURATIONS TESTED
02	DELTA WING	MSC	1115	0.6-1.4	LTV	0.008105	MSC S-13A ORBITER, MSC SB-13A BOOSTER
02	DELTA WING	MSC	1186	0.6-4.96	MSFC	0.006	NASA/MSC 040A DELTA WING ORBITER
02	DELTA WING	MSC	1202	0.6-2.0	ARC	0.015	NR 040-A ORBITER
02	DELTA WING	MSC	1215	0.25	LARC	0.019	MSC 040A ORBITER
02	DELTA WING	MSC	1218	20.3	LARC	0.005	MSC 040A ORBITER
02	DELTA WING	MSC	1219	10.3	LARC	0.0075	MSC 040A ORBITER
02	DELTA WING	MSC	1221	2.0-4.0	JPL	0.0075	MSC 040A ORBITER
02	DELTA WING	MSC	1230	0.6-4.5	MDAC	0.006	PARALLEL BURN PRESSURE FED AND SRM BOOSTERS, 040A ORBITER
02	DELTA WING	MSC	1243	0.6-4.96	MSFC	0.006	MSC 040A ORBITER
02	DELTA WING	MSC	1250	0.6-1.2	ARC	0.05	MSC 040A ORBITER
02	DELTA WING	MSC	1258	2.3-4.62	LARC	0.019	MSC 040A ORBITER
02	DELTA WING	MSC	1274	0.6-4.96	MSFC	0.006	040A DELTA WING ORBITER
02	DELTA WING	NR	1021	0.25-2.0	ARC	0.008	NARC 129 SSV ORBITER (DELTA WING, HIGH CROSS RANGE)
02	DELTA WING	NR	1026	0.6-2.0	ARC	0.0076	NAR/GD STRAIGHT WING ORBITER, NAR/GD DELTA WING ORBITER
02	DELTA WING	NR	1027	0.6-5.0	MSFC	0.0035	134B DELTA WING ORBITER, 130G STRAIGHT WING ORBITER
02	DELTA WING	NR	1031	7.4	ARC	0.008	NAR HIGH CROSS-RANGE ORBITER
02	DELTA WING	NR	1037	0.26	NRLAD	0.0763	NAR 134B DELTA WING ORBITER
02	DELTA WING	NR	1043	0.6-5.0	MSFC	0.0035	NAR DELTA WING (134B) ORBITER, NAR STRAIGHT WING ORBITER (130G)
02	DELTA WING	NR	1052	1.1-1.6	GDC	0.0035	GD/C STRAIGHT WING BOOSTER (B8X), GD/C DELTA WING BOOSTER (B-9J), NAR STRAIGHT WING ORBITER (130G), NAR DELTA WING ORBITER (134B)

Table 1.1.2 - Continued

Space Shuttle Phase B Wind Tunnel Test
Database Summary

Orbiter Aerodynamics

CODE	CONFIG. I.D.	CONTRACTOR	DMS-DR#	MACH RANGE	FACILITY	MODEL SCALE	CONFIGURATIONS TESTED
02	DELTA WING	NR	1076	0.6-4.96	MSFC	0.0035	NR DELTA WING ORBITER (134D), NR STRAIGHT WING ORBITER (130G)
02	DELTA WING	NR	1078	0.25-2.0	ARC	0.00763	NR/GD DELTA WING ORBITER
02	DELTA WING	NR	1084	10.0	LARC	0.0076	NR DELTA WING ORBITER - HCR 134D/161B
02	DELTA WING	NR	1088	20.3	LARC	0.0035	NR 134D DELTA WING ORBITER
02	DELTA WING	NR	1092	0.4-1.3	AEDC	0.0035	NR DELTA WING ORBITER
02	DELTA WING	NR	1095	6.0	LARC	0.00763	NR DELTA WING ORBITER - HCR 134D/161B
02	DELTA WING	NR	1096	2.5-4.6	LARC	0.00763	NR DELTA WING ORBITER - HCR 134D/161B
02	DELTA WING	NR	1097	0.6-1.2	LARC	0.01189	NR DELTA WING ORBITER (134D)
02	DELTA WING	NR	1101	1.6-4.63	LARC	0.01189	NR 134D DELTA WING ORBITER
02	DELTA WING	NR	1104	7.37	ARC	0.00761	NR DELTA WING ORBITER
02	DELTA WING	NR	1105	0.6-1.2	LARC	0.00763	NR DELTA WING ORBITER
02	DELTA WING	NR	1106	0.22-0.25	LARC	0.00763	NR DELTA WING ORBITER 134D/161B
02	DELTA WING	NR	1107	0.25	LARC	0.01189	NR DELTA WING ORBITER 134D
02	DELTA WING	NR	1113	10.0	LARC	0.00555	NR 134D ORBITER
02	DELTA WING	NR	1114	0.6-1.3	MSFC	0.0035	NR DELTA WING ORBITER
02	DELTA WING	NR	1124	0.26	NRLAD	0.00763	NR DELTA WING ORBITER
02	DELTA WING	NR	1126	0.6-4.96	MSFC	0.0035	NR DELTA WING ORBITER
02	DELTA WING	NR	1144	2.5-4.6	LARC	0.00763	NR 134D/161B ORBITER
02	DELTA WING	NR	1176	20.3	LARC	0.0035	NR 134D DELTA WING ORBITER, NR 134D/161B DELTA WING ORBITER
02	DELTA WING	NR	1185	0.6-4.96	MSFC	0.0044	NR-110C ORBITER
02	DELTA WING	NR	1190	0.25	LARC	0.0035	MDAC/MMC 256-14 BOOSTER, MDAC 0050B ORBITER, NAR/GDC B-15B-1 BOOSTER, NAR 134D ORBITER

ORIGINAL PAGE IS
OF POOR QUALITY

Table 1.1.2 - Continued

Space Shuttle Phase B Wind Tunnel Test Database Summary

Orbiter Aerodynamics

CODE	CONFIG. I.D.	CONTRACTOR	DMS-OR#	MACH RANGE	FACILITY	MODEL SCALE	CONFIGURATIONS TESTED
02	DELTA WING	NR	1237	1.6-2.16	LARC	0.0056	GD/C B9U BOOSTER WITH NR 134D ORBITER, GD/C B9U BOOSTER, NR 134D ORBITER
03	STRAIGHT WING	MDAC	1028	0.7-2.0	ARC	0.007	MDAC ORBITER (LCR), MDAC ORBITER (HCR)
03	STRAIGHT WING	MDAC	1072	7.4	ARC	0.007	MDAC STRAIGHT WING ORBITER, MDAC DELTA WING ORBITER
03	STRAIGHT WING	MDAC	1090	0.26	MAC	0.04	MDAC LCR ORBITER
03	STRAIGHT WING	MSC	1002	7.43	ARC	0.0125	MSC ORBITER S-3 (12.5K ORBITER)
03	STRAIGHT WING	MSC	1004	6.0	LARC	0.00725	NASA/MSC ORBITER (AUG 1969 REVISED BASELINE)
03	STRAIGHT WING	MSC	1007	0.19-0.25	MAC	0.01875	MSC (AUGUST 1969 CONFIGURATION) ORBITER (S-5)
03	STRAIGHT WING	MSC	1008	0.25	TAM	0.01875	NASA/MSC ORBITER SHUTTLE (MODEL S-5)
03	STRAIGHT WING	MSC	1011	0.25-2.0	ARC	0.0125	MSC ORBITER S-3
03	STRAIGHT WING	MSC	1012	0.6-1.35	ARC	0.02	MSC ORBITER (MOD. OF MAY 1969 CONFIGURATION)
03	STRAIGHT WING	MSC	1057	0.25	TAM	0.01875	MSC S-1 ORBITER, MSC S-5 ORBITER
03	STRAIGHT WING	MSC	1057	0.25	TAM	0.02	MSC S-1 ORBITER, MSC S-5 ORBITER
03	STRAIGHT WING	MSC	1060	0.25	TAM	0.05	NASA-MSC S-4 ORBITER (AUG. 1969 BASELINE)
03	STRAIGHT WING	MSC	1062	0.25	TAM	0.01875	NASA/MSC S-5 ORBITER
03	STRAIGHT WING	MSC	1073	0.25	TAM	0.01875	NASA/MSC MODEL S-5 SHUTTLE
03	STRAIGHT WING	MSC	1205	0.25	TAM	0.05	NASA/MSC AUG. 1969 BASELINE ORBITER (MODEL S-4)
03	STRAIGHT WING	NR	1010	0.26	NRLAD	0.0076	ILRV STRAIGHT WING ORBITER (MODEL 130C)
03	STRAIGHT WING	NR	1026	0.6-2.0	ARC	0.0076	NAR/GD STRAIGHT WING ORBITER, NAR/GD DELTA WING ORBITER
03	STRAIGHT WING	NR	1027	0.6-5.0	MSFC	0.0035	134B DELTA WING ORBITER, 130G STRAIGHT WING ORBITER
03	STRAIGHT WING	NR	1036	0.26	NRLAD	0.00761	NAR STRAIGHT WING ORBITER

ORIGINAL PAGE IS OF POOR QUALITY

Table 1.1.2 - Concluded

Space Shuttle Phase B Wind Tunnel Test
Database Summary

Orbiter Aerodynamics

CODE	CONFIG. I.D.	CONTRACTOR	DMS-DR#	MACH RANGE	FACILITY	MODEL SCALE	CONFIGURATIONS TESTED
03	STRAIGHT WING	NR	1043	0.6-5.0	MSFC	0.0035	NAR DELTA WING (134B) ORBITER, NAR STRAIGHT WING ORBITER (130G)
03	STRAIGHT WING	NR	1049	0.25-0.40	LARC	0.0076	NR STRAIGHT WING ORBITER
03	STRAIGHT WING	NR	1052	1.1-1.6	GDC	0.0035	GD/C STRAIGHT WING BOOSTER (B8X), GD/C DELTA WING BOOSTER (B-9J), NAR STRAIGHT WING ORBITER (130G), NAR DELTA WING ORBITER (134B)
03	STRAIGHT WING	NR	1064	0.4-1.2	LARC	0.00761	NAR STRAIGHT WING ORBITER
03	STRAIGHT WING	NR	1069	1.5-2.0	LARC	0.00556	NAR 130G STRAIGHT WING ORBITER
03	STRAIGHT WING	NR	1076	0.6-4.96	MSFC	0.0035	NR DELTA WING ORBITER (134D), NR STRAIGHT WING ORBITER (130G)
03	STRAIGHT WING	NR	1082	0.25-2.0	ARC	0.00761	NR/GD STRAIGHT WING ORBITER
03	STRAIGHT WING	NR	1104	7.37	ARC	0.00761	NR STRAIGHT WING ORBITER
04	UNIQUE CONFIGS.	GAC	1112	0.6-2.0	ARC	0.0133	GRUMMAN ROS-NB2 ORBITER
04	UNIQUE CONFIGS.	GAC	1187	0.6-4.96	MSFC	0.0034	S-IC BOOSTER WITH GAC H-33 ORBITER, GAC H-33 ORBITER
04	UNIQUE CONFIGS.	LARC	1018	0.21-0.33	LARC	NONE	LARC VARIABLE DIHEDRAL ORBITER
04	UNIQUE CONFIGS.	MMC	1182	0.6-3.48	MSFC	0.0043	MMC TITAN III L BOOSTER WITH MMC DTO-7 ORBITER, MMC DTO-7 ORBITER
04	UNIQUE CONFIGS.	NR	1162	0.6-4.96	MSFC	0.0031	NR/GD DELTA WING BOOSTER B-15B-1 WITH REUSABLE NUCLEAR STAGE, NAR/GD REUSABLE NUCLEAR STAGE, NAR/GD B-15B-1 DELTA WING BOOSTER

ORIGINAL PAGE IS
OF POOR QUALITY

Table 1 1.3

Space Shuttle Phase B Wind Tunnel Test
Database Summary

Launch Aerodynamics

BOOS CODE	BOOSTER CONFIG I.D.	BOOSTER CONTRA.	ORB CODE	ORBITER CONFIG I.D	ORBITER CONTRA.	DMS-DR#	MACH RANGE	FAC.	MODEL SCALE	CONFIGURATIONS TESTED
B1	CANARD	MDAC	02	DELTA WING	MDAC	1065	0.6-2.0	ARC	0.007	MDAC HIGH WING BOOSTER, MDAC LOW CROSS RANGE ORBITER, MDAC LOW WING BOOSTER, MDAC HIGH CROSS RANGE ORBITER
B1	CANARD	MDAC	02	DELTA WING	MDAC	1108	2.0-6.0	AEDC	0.00556	MDAC ORBITER, MARTIN BOOSTER
B1	CANARD	MDAC	02	DELTA WING	MDAC	1118	0.6-2.0	ARC	0.007	DELTA WING ORBITER, BOOSTER WITH CANARD, AFT SWEPT WING, TIP FINS
B1	CANARD	MDAC/MMC	02	DELTA WING	MDAC	1117	2.3-4.6	LARC	0.007	MDAC/MMC HCR DELTA WING ORBITER, MDAC/MMC SBC BOOSTER
B1	CANARD	MDAC/MMC	02	DELTA WING	MDAC	1190	0.25	LARC	0.0032	MDAC/MMC 256-14 BOOSTER, MDAC 0050B ORBITER, NAR/GDC B-15B-1 BOOSTER, NAR 134D ORBITER
B1	CANARD	TBC	02	DELTA WING	GAC	1148	0.6-5.0	MSFC	0.002456	TBC AR119BI-1 BOOSTER WITH GAC C3-A ORBITER, BOEING AR119BI-1 BOOSTER
B1	CANARD	MDAC	03	STRAIGHT WING	MDAC	1065	0.6-2.0	ARC	0.007	MDAC HIGH WING BOOSTER, MDAC LOW CROSS RANGE ORBITER, MDAC LOW WING BOOSTER, MDAC HIGH CROSS RANGE ORBITER
B1	CANARD	MDAC	04	UNIQUE CONFIGS.	MDAC	1099	0.6-2.0	ARC	0.007	MDAC BOOSTER WITH S-IVB SECOND STAGE
B1	CANARD	MDAC	04	UNIQUE CONFIGS.	MDAC	1146	0.6-4.96	MSFC	0.00205	MDAC PARALLEL BURN LAUNCH CONFIGURATION
B2	CYLINDRICAL	GD/C	02	DELTA WING	MSC	1204	0.6-5.0	MSFC	0.003366	GD/C B19B BOOSTER WITH MSC 040A ORBITER, GD/C B19B BOOSTER
B2	CYLINDRICAL	GD/C	02	DELTA WING	MSC	1210	0.9-4.96	MSFC	0.003366	TWIN PRESSURE FED BOOSTER WITH MSC 040A ORBITER, GD/C B-18E-2 BOOSTER, GD/C B-18E-3 BOOSTER
B2	CYLINDRICAL	MDAC	02	DELTA WING	MSC	1200	0.6-4.5	MDAC	0.006	PARALLEL BURN PRESSURE FED AND SRM BOOSTERS, 040A ORBITER
B2	CYLINDRICAL	MSFC	02	DELTA WING	LMSC	1256	0.6-4.96	MSFC	0.0041	PARAMETRIC LAUNCH VEHICLE
B2	CYLINDRICAL	MSFC	02	DELTA WING	LMSC	1272	0.6-4.96	MSFC	0.004	PARAMETRIC LAUNCH CONFIGURATION

ORIGINAL PAGE IS
OF POOR QUALITY

Table 1.1.3 - Continued

Space Shuttle Phase B Wind Tunnel Test
Database Summary

Launch Aerodynamics

BODS CODE	BOOSTER CONFIG I D	BOOSTER CONTRA	ORB CODE	ORBITER CONFIG I D	ORBITER CONTRA.	DMS-- DRI	MACH RANGE	FAC	MODEL SCALE	CONFIGURATIONS TESTED
B2	CYLINDRICAL	MSFC	02	DELTA WING	MSC	1241	0 6-4.0	MSFC	0.006	MSC 040A ORBITER WITH EXTERNAL TANKS
B2	CYLINDRICAL	MSFC	02	DELTA WING	MSC	1249	0.9-2.0	MSFC	0 00336	MSC 040C-2/2-156 PARALLEL BURN LAUNCH CONFIGURATION
B2	CYLINDRICAL	MSFC	02	DELTA WING	MSC	1251	0 6-4.96	MSFC	0.004	PARALLEL BURN SRM ASCENT CONFIGURATION
B2	CYLINDRICAL	MSFC	02	DELTA WING	MSC	1265	2.3-4.62	LARC	0 019	040 ASCENT CONFIGURATION
B2	CYLINDRICAL	MSFC	02	DELTA WING	MSC	1267	0.8-1.4	ARC	0.019	040A LAUNCH CONFIGURATION
B2	CYLINDRICAL	MSFC	02	DELTA WING	MSC	1267	1.6-2.2	ARC	0.019	040A LAUNCH CONFIGURATION
B2	CYLINDRICAL	NR	02	DELTA WING	NR	1105	0.6-4.96	MSFC	0 0044	NR-110C ORBITER
B2	CYLINDRICAL	TBC	02	DELTA WING	MSC	1227	0 6-4.96	MSFC	0 003366	PRESSURE FED BOOSTER WITH MSC 040A ORBITER, PRESSURE FED BOOSTER
B2	CYLINDRICAL	MSFC	04	UNIQUE CONFIGS	GAC	1101	0 6-4.96	MSFC	0.003366	GAC H-33 ORBITER , 3 SEGMENT SOLID BOOSTER
B3	DELTA WING	GD/C	02	DELTA WING	NR	1052	1 1-1.6	GDC	0.0035	GD/C STRAIGHT WING BOOSTER (B8X), GD/C DELTA WING BOOSTER (B-9J), NAR STRAIGHT WING ORBITER (130G), NAR DELTA WING ORBITER (134B)
B3	DELTA WING	GD/C	02	DELTA WING	NR	1127	0.6-2.0	ARC	0.0076	NR DELTA WING ORBITER, GD DELTA WING BOOSTER
B3	DELTA WING	GD/C	02	DELTA WING	NR	1130	0.6-5.0	MSFC	0 0035	NR/GD DELTA WING BOOSTER, NR 134D DELTA WING ORBITER
B3	DELTA WING	GD/C	02	DELTA WING	NR	1190	0 25	LARC	0 0029	MDAC/MMC 256-14 BOOSTER, MDAC 0050D ORBITER, NAR/GDC B-15B-1 BOOSTER, NAR 134D ORBITER
B3	DELTA WING	GD/C	02	DELTA WING	NR	1207	1 6-2.16	LARC	0.0056	GD/C B9U BOOSTER WITH NR 134D ORBITER, GD/C B9U BOOSTER, NR 134D ORBITER

ORIGINAL PAGE IS
OF POOR QUALITY

Table 1.1.3 - Continued

Space Shuttle Phase B Wind Tunnel Test
Database Summary

Launch Aerodynamics

BOOS CODE	BOOSTER CONFIG. I.D.	BOOSTER CONTRA	ORB CODE	ORBITER CONFIG I.D.	ORBITER CONTRA.	DMS-ORB	MACH RANGE	FAC.	MODEL SCALE	CONFIGURATIONS TESTED
B3	DELTA WING	MMC	02	DELTA WING	MSC	1213	0.6-4.96	MSFC	0.0034	MMC RETRO-GLIDE BOOSTER WITH MSC 040A ORBITER, MMC RETRO-GLIDE BOOSTER
B3	DELTA WING	MSC	02	DELTA WING	MSC	1115	0.6-1.4	LTV	0.008105	MSC S-13A ORBITER, MSC SB-13A BOOSTER
B3	DELTA WING	MSC/MDAC	02	DELTA WING	MSC/MDAC	1038	0.6-2.0	ARC	0.08	MSC/MDAC STRAIGHT WING BOOSTER, MSC/MDAC STRAIGHT AND DELTA WING ORBITERS, MSC/MDAC DELTA WING BOOSTER
B3	DELTA WING	TBC	02	DELTA WING	MSC	1183	0.6-4.96	MSFC	0.003366	TBC RS-IC BOOSTER WITH MSC 040A ORBITER, TBC RS-IC BOOSTER
B3	DELTA WING	GD/C	03	STRAIGHT WING	NR	1052	1.1-1.6	GDC	0.0035	GD/C STRAIGHT WING BOOSTER (BBX), GD/C DELTA WING BOOSTER (B-9J), NAR STRAIGHT WING ORBITER (130G), NAR DELTA WING ORBITER (134B)
B3	DELTA WING	MDAC	03	STRAIGHT WING	MSC	1047	10.4	LARC	0.00725	NASA/MSC ORBITER CLOSE TO CLIPPED DELTA WING BOOSTER
B3	DELTA WING	MDAC	03	STRAIGHT WING	MSC	1061	10.4	LARC	NONE	MDAC CLIPPED DELTA WING BOOSTER (PHASE A)
B3	DELTA WING	MSC	03	STRAIGHT WING	MSC	1058	1.81-4.39	LTV	0.008810	MSC DELTA WING BOOSTER, MSC STRAIGHT WING ORBITER (MODEL S-13A)
B3	DELTA WING	MSC/MDAC	03	STRAIGHT WING	MSC/MDAC	1038	0.6-2.0	ARC	0.08	MSC/MDAC STRAIGHT WING BOOSTER, MSC/MDAC STRAIGHT AND DELTA WING ORBITERS, MSC/MDAC DELTA WING BOOSTER
B3	DELTA WING	GD/C	04	UNIQUE CONFIGS	NR	1119	0.6-4.96	MSFC	0.0031	EXPENDABLE SECOND STAGE, PAYLOAD AND DELTA WING BOOSTER (B-15B-1), G/D DELTA WING BOOSTER WITH EXPENDABLE SECOND STAGE

ORIGINAL PAGE IS
OF POOR QUALITY

Table 1.1.3 - Continued

Space Shuttle Phase B Wind Tunnel Test
Database Summary

Launch Aerodynamics

BOOS CODE	BOOSTER CONFIG. I.D.	BOOSTER CONTRA	ORB CODE	ORBITER CONFIG. I.D.	ORBITER CONTRA.	DMS-DR#	MACH RANGE	FAC	MODEL SCALE	CONFIGURATIONS TESTED
B3	DELTA WING	GD/C	04	UNIQUE CONFIGS.	NR	1162	0.6-4.96	MSFC	0.0031	NR/GD DELTA WING BOOSTER B-15B-1 WITH REUSABLE NUCLEAR STAGE, NAR/GD REUSABLE NUCLEAR STAGE, NAR/GD B-15B-1 DELTA WING BOOSTER
B3	DELTA WING	TBC	04	DELTA WING	MSC	1183	0.6-4.96	MSFC	0.003366	TBC RS-IC BOOSTER WITH MSC 040A ORBITER, TBC RS-IC BOOSTER
B4	STRAIGHT WING	GD/C	02	DELTA WING	NR	1050	0.6-2.0	ARC	0.0076	NAR/GD STRAIGHT WING BOOSTER WITH NAR/GD STRAIGHT WING AND DELTA WING ORBITERS, NAR/GD STRAIGHT WING BOOSTER
B4	STRAIGHT WING	GD/C	02	DELTA WING	NR	1051	0.6-2.0	MSFC	0.0035	NAR-GD/C STRAIGHT WING BOOSTER (B-8H MODIFIED), NAR-GD/C STRAIGHT WING ORBITER (130G), NAR-GD/C DELTA WING ORBITER (134B)
B4	STRAIGHT WING	GD/C	02	DELTA WING	NR	1052	1.1-1.6	GDC	0.0035	GD/C STRAIGHT WING BOOSTER (B8X), GD/C DELTA WING BOOSTER (B-9J), NAR STRAIGHT WING ORBITER (130G), NAR DELTA WING ORBITER (134B)
B4	STRAIGHT WING	GD/C	02	DELTA WING	NR	1075	0.6-2.0	ARC	0.0076	GD/C B-811-1 BOOSTER, NAR ORBITER
B4	STRAIGHT WING	MSC/MDAC	02	DELTA WING	MSC/MDAC	1038	0.6-2.0	ARC	0.08	MSC/MDAC STRAIGHT WING BOOSTER, MSC/MDAC STRAIGHT AND DELTA WING ORBITERS, MSC/MDAC DELTA WING BOOSTER
B4	STRAIGHT WING	GD/C	03	STRAIGHT WING	NR	1050	0.6-2.0	ARC	0.0076	NAR/GD STRAIGHT WING BOOSTER WITH NAR/GD STRAIGHT WING AND DELTA WING ORBITERS, NAR/GD STRAIGHT WING BOOSTER
B4	STRAIGHT WING	GD/C	03	STRAIGHT WING	NR	1051	0.6-2.0	MSFC	0.0035	NAR-GD/C STRAIGHT WING BOOSTER (B-8H MODIFIED), NAR-GD/C STRAIGHT WING ORBITER (130G), NAR-GD/C DELTA WING ORBITER (134B)

Table 1.1.3 - Continued

Space Shuttle Phase B Wind Tunnel Test
Database Summary

Launch Aerodynamics

BOOS CODE	BOOSTER CONFIG. I.D	BOOSTER CONTRA.	ORB CODE	ORBITER CONFIG. I.D	ORBITER CONTRA.	DMS-DR#	MACH RANGE	FAC.	MODEL SCALE	CONFIGURATIONS TESTED
B4	STRAIGHT WING	GD/C	03	STRAIGHT WING	NR	1052	1.1-1.6	GDC	0.0035	GD/C STRAIGHT WING BOOSTER (B8X), GD/C DELTA WING BOOSTER (B-9J), NAR STRAIGHT WING ORBITER (130G), NAR DELTA WING ORBITER (134B)
B4	STRAIGHT WING	GD/C	03	STRAIGHT WING	NR	1075	0.6-2.0	ARC	0.0076	GD/C B-811-1 BOOSTER, NAR ORBITER
B4	STRAIGHT WING	MSC	03	STRAIGHT WING	MSC	1042	0.6-1.4	ARC	0.01	MSC 251 REVISION B BASELINE BOOSTER, MSC 251 REVISION B BASELINE ORBITER
B4	STRAIGHT WING	MSC	03	STRAIGHT WING	MSC	1058	1.01-4.39	LTV	0.008811	MSC DELTA WING BOOSTER, MSC STRAIGHT WING ORBITER (MODEL S-13A)
B4	STRAIGHT WING	MSC	03	STRAIGHT WING	MSC	1063	0.6-2.0	ARC	0.008	MSC STRAIGHT WING ORBITER, MSC STRAIGHT WING BOOSTER
B4	STRAIGHT WING	MSC	03	STRAIGHT WING	MSC	1115	0.6-1.4	LTV	0.008105	MSC S-13A ORBITER, MSC SB-13A BOOSTER
B4	STRAIGHT WING	MSC/MDAC	03	STRAIGHT WING	MSC/MDAC	1038	0.6-2.0	ARC	0.08	MSC/MDAC STRAIGHT WING BOOSTER, MSC/MDAC STRAIGHT AND DELTA WING ORBITERS, MSC/MDAC DELTA WING BOOSTER
B4	STRAIGHT WING	TBC	04	UNIQUE CONFIGS.	GAC	1122	0.6-2.0	ARC	0.00667	TBC STRAIGHT WING BOOSTER, GRUMMAN ROS-NB1 DELTA WING ORBITER
B4	STRAIGHT WING	TBC	04	UNIQUE CONFIGS.	GAC	1136	0.6-1.5	ARC	0.00667	GAC ROS-NB2 ORBITER, LIQUID HYDROGEN TANKS, TBC 1202 BOOSTER
B4	STRAIGHT WING	TBC	04	UNIQUE CONFIGS.	GAC	1137	0.6-2.0	ARC	0.00667	GAC ROS-NB2 ORBITER, TANKS, TBC 1202 BOOSTER
B5	UNIQUE CONFIGS	LMSC	01	DELTA BODY	LMSC	1005	0.6-2.0	ARC	0.01	LOCKHEED STAGE-AND-ONE-HALF
B5	UNIQUE CONFIGS	LARC	02	DELTA WING	NR	1197	1.5-2.16	LARC	0.0076	LARC LOW FINENESS RATIO BOOSTER WITH NAR 134D ORBITER, NASA LOW FINENESS RATIO BOOSTER

Table 1.1.3 - Concluded

Space Shuttle Phase B Wind Tunnel Test
Database Summary

Launch Aerodynamics

BOOS CODE	BOOSTER CONFIG. I.D.	BOOSTER CONTRA	ORB CODE	ORBITER CONFIG. I.D.	ORBITER CONTRA	DMS-DR#	MACH RANGE	FAC.	MODEL SCALE	CONFIGURATIONS TESTED
85	UNIQUE CONFIGS.	LARC	02	DELTA WING	NR	1198	10.2	LARC	NONE	LARC LOW FINENESS RATIO BOOSTER WITH NAR 134D ORBITER, LARC LOW FINENESS RATIO BOOSTER
85	UNIQUE CONFIGS.	LARC	02	DELTA WING	NR	1200	0.4-1.2	LARC	0.0076	LOW FINENESS RATIO BOOSTER WITH NAR 134D ORBITER, LOW FINENESS RATIO BOOSTER
85	UNIQUE CONFIGS.	TBC	02	DELTA WING	NR	1055	0.6-1.96	MSFC	0.003366	NR/GD DELTA WING ORBITER, SATURN V S-IC BOOSTER
85	UNIQUE CONFIGS.	TBC	02	DELTA WING	NR	1091	0.60-1.96	MSFC	0.003366	S-IC/NR HCR ORBITER
85	UNIQUE CONFIGS.	TBC	03	STRAIGHT WING	GAC	1044	0.6-1.3	MSFC	0.003366	S-IC BOOSTER WITH GAC C4 ORBITER
85	UNIQUE CONFIGS	MMC	04	UNIQUE CONFIGS	GAC	1188	0.6-4.96	MSFC	0.003366	TITAN T III L BOOSTER, GAC H-33 ORBITER
85	UNIQUE CONFIGS.	MMC	04	UNIQUE CONFIGS.	MMC	1182	0.6-3.48	MSFC	0.0043	MMC TITAN III L BOOSTER WITH MMC DTO-7 ORBITER, MMC DTO-7 ORBITER
85	UNIQUE CONFIGS.	TBC	04	UNIQUE CONFIGS	GAC	1140	0.6-4.96	MSFC	0.0034	S-IC/GRUMMAN G-11 (H3T) DROP TANK ORBITER
85	UNIQUE CONFIGS	TBC	04	UNIQUE CONFIGS.	GAC	1187	0.6-4.96	MSFC	0.0034	S-IC BOOSTER WITH GAC H-33 ORBITER, GAC H-33 ORBITER

Table 1.2.1

Space Shuttle Phase B Wind Tunnel Test
Database Summary

Booster Airloads

CODE	CONFIG I.D.	CONTRACTOR	DMS-DR#	MACH RANGE	FACILITY	MODEL SCALE	CONFIGURATIONS TESTED
B1	CANARD	MDAC	1222	0.6-1.3	AEDC	0.00556	MDAC CANARD BOOSTER AND DELTA WING ORBITER
B1	CANARD	MDAC	1225	8.0	AEDC	0.011	MDAC CANARD BOOSTER AND DELTA WING ORBITER, AND NR DELTA WING ORBITER
B4	STRAIGHT WING	GD/C	1129	0.6-2.0	ARC	0.00761	GD/C STRAIGHT WING BOOSTER, GD/C STRAIGHT WING BOOSTER WITH NR DELTA WING ORBITER, GD/C STRAIGHT WING BOOSTER WITH NR STRAIGHT WING ORBITER
B5	UNIQUE CONFIGS.	CCSD	1125	0.0-1.25	AEDC	0.025	SERV

ORIGINAL PAGE IS
OF POOR QUALITY

Table 1.2.2

Space Shuttle Phase B Wind Tunnel Test
Database Summary

Orbiter Airloads

CODE	CONFIG. I.D	CONTRACTOR	DMS-DR#	MACH RANGE	FACILITY	MODEL SCALE	CONFIGURATIONS TESTED
02	DELTA WING	MDAC	1225	8.0	AEDC	0.011	MDAC CANARD BOOSTER AND DELTA WING ORBITER, AND NR DELTA WING ORBITER
02	DELTA WING	MSFC	1259	0.6-4.96	MSFC	0.004	NASA DOUBLE DELTA ORBITER WITH EXTERNAL TANK AND SRB'S, NASA DOUBLE DELTA WING ORBITER
02	DELTA WING	NR	1129	0.6-2.0	ARC	0.00761	GD/C STRAIGHT WING BOOSTER, GD/C STRAIGHT WING BOOSTER WITH NR DELTA WING ORBITER, GD/C STRAIGHT WING BOOSTER WITH NR STRAIGHT WING ORBITER
02	DELTA WING	NR	1225	8.0	AEDC	0.011	MDAC CANARD BOOSTER AND DELTA WING ORBITER, AND NR DELTA WING ORBITER
03	STRAIGHT WING	NR	1129	0.6-2.0	ARC	0.00761	GD/C STRAIGHT WING BOOSTER, GD/C STRAIGHT WING BOOSTER WITH NR DELTA WING ORBITER, GD/C STRAIGHT WING BOOSTER WITH NR STRAIGHT WING ORBITER

ORIGINAL PAGE IS
OE POOR QUALITY

Table 1.2.3

Space Shuttle Phase B Wind Tunnel Test
Database Summary

Launch Airloads

BOOS CODE	BOOSTER CONFIG. I.D.	BOOSTER CONTRA.	ORB CODE	ORBITER CONFIG. I.D.	ORBITER CONTRA.	DMS-DR#	MACH RANGE	FAC.	MODEL SCALE	CONFIGURATIONS TESTED
B1	CANARD	MDAC	O2	DELTA WING	MDAC	1174	2.0-5.0	AEDC	0.00556	MDAC BOOSTER, MDAC ORBITER
B1	CANARD	MDAC	O2	DELTA WING	MDAC	1222	0.6-1.3	AEDC	0.00556	MDAC CANARD BOOSTER AND DELTA WING ORBITER
B2	CYLINDRICAL	MSFC	O2	DELTA WING	LMSC	1255	0.8-1.96	MSFC	0.004	DOUBLE DELTA WING ORBITER IN LAUNCH CONFIGURATION
B2	CYLINDRICAL	MSFC	O2	DELTA WING	MSFC	1259	0.6-4.96	MSFC	0.004	NASA DOUBLE DELTA ORBITER WITH EXTERNAL TANK AND SRB'S, NASA DOUBLE DELTA WING ORBITER
B2	CYLINDRICAL	MSFC	O2	DELTA WING	MSFC	1273	0.6-4.96	MSFC	0.004	DOUBLE DELTA WING ORBITER IN LAUNCH CONFIGURATION
B4	STRAIGHT WING	GD/C	O2	DELTA WING	NR	1128	0.6-2.0	ARC	0.00761	GD/C STRAIGHT WING BOOSTER, GD/C STRAIGHT WING BOOSTER WITH NR DELTA WING ORBITER, GD/C STRAIGHT WING BOOSTER WITH NR STRAIGHT WING ORBITER
B4	STRAIGHT WING	GD/C	O3	STRAIGHT WING	NR	1129	0.6-2.0	ARC	0.00761	GD/C STRAIGHT WING BOOSTER, GD/C STRAIGHT WING BOOSTER WITH NR DELTA WING ORBITER, GD/C STRAIGHT WING BOOSTER WITH NR STRAIGHT WING ORBITER
B4	STRAIGHT WING	TBC	O4	UNIQUE CONFIGS.	GAC	1136	0.6-1.5	ARC	0.00667	GAC ROS-NB2 ORBITER, LIQUID HYDROGEN TANKS, TBC 1202 BOOSTER

ORIGINAL PAGE IS
OF POOR QUALITY

Table 1.3.1

Space Shuttle Phase B Wind Tunnel Test
Database Summary

Booster Heat Transfer

CODE	CONFIG. I.D.	CONTRACTOR	DMS-DR#	MACH RANGE	FACILITY	MODEL SCALE	CONFIGURATIONS TESTED
B1	CANARD	MDAC	1170	7.5-13.0	CAL	0.007	MDAC CANARD BOOSTER WITH MDAC DELTA WING ORBITER, MDAC DELTA WING ORBITER, MDAC CANARD BOOSTER
B1	CANARD	MDAC	1207	8.0	AEDC	0.011	MDAC CANARD BOOSTER AND DELTA WING ORBITER
B1	CANARD	MDAC	1262	8.0	AEDC	0.011	MDAC CANARD BOOSTER AND DELTA WING ORBITER
B1	CANARD	MDAC/MMC	1036	10.0	LARC	0.00325	MDC/MMC PHASE B BASELINE BOOSTER, MDC/MMC PHASE B LOW CROSS RANGE ORBITER, MDC/MMC PHASE B ALTERNATE BOOSTER, MDC/MMC PHASE B HIGH CROSS RANGE ORBITER
B1	CANARD	MDAC/MMC	1036	8.0	LARC	0.00325	MDC/MMC PHASE B BASELINE BOOSTER, MDC/MMC PHASE B LOW CROSS RANGE ORBITER, MDC/MMC PHASE B ALTERNATE BOOSTER, MDC/MMC PHASE B HIGH CROSS RANGE ORBITER
B1	CANARD	MDAC/MMC	1138	8.0	LARC	0.00325	MDC/MMC PHASE B BOOSTER WITH VENTRAL TIP FINS
B2	CYLINDRICAL	GD/C	1236	8.0	LARC	0.0035	GD/C B9V BOOSTER NOSE-FUSELAGE CONFIGURATION
B2	CYLINDRICAL	TBC	1261	8.0	LARC	0.0033	MSC 040A ORBITER WITH CYLINDRICAL BOOSTER 979-160, CYLINDRICAL BOOSTER 979-160
B3	DELTA WING	GD/C	1020	10.0	LARC	0.0035	CONVAIR STRAIGHT WING (B-8B) BOOSTER, CONVAIR DELTA WING (B-9J) BOOSTER
B3	DELTA WING	GD/C	1024	8.0	LARC	0.0035	CONVAIR STRAIGHT WING (B-8B) BOOSTER, CONVAIR DELTA WING (B-9J) BOOSTER
B3	DELTA WING	GD/C	1070	7.80-7.95	LARC	0.0032	DELTA WING BOOSTER WITH CANARD (B-15B)
B3	DELTA WING	GD/C	1098	2.5-3.7	LARC	0.006	GD/C DELTA WING BOOSTER (B-9J), NAR STRAIGHT WING ORBITER, NAR DELTA WING ORBITER
B3	DELTA WING	GD/C	1145	7.80-7.95	LARC	0.003	GD/C BOOSTER B-9U WITH NAR ORBITER 161C, GD/C BOOSTER B-15B-2, GD/C BOOSTER B-9U
B3	DELTA WING	GD/C	1145	7.80-7.95	LARC	0.0033	GD/C BOOSTER B-9U WITH NAR ORBITER 161C, GD/C BOOSTER B-15B-2, GD/C BOOSTER B-9U

Table 1.3.1 - Concluded

Space Shuttle Phase B Wind Tunnel Test
Database Summary

Booster Heat Transfer

CODE	CONFIG. I.D.	CONTRACTOR	DMS-DR#	MACH RANGE	FACILITY	MODEL SCALE	CONFIGURATIONS TESTED
B3	DELTA WING	GD/C	1145	7.80-7.95	LARC	0.004	GD/C BOOSTER B-9U WITH NAR ORBITER 161C, GD/C BOOSTER B-15B-2, GD/C BOOSTER B-9U
B3	DELTA WING	GD/C	1177	8.0	AEDC	0.009	GD/C B-15B-2 BOOSTER, NAR 161B ORBITER
B3	DELTA WING	GD/C	1179	7.4	ARC	0.006	GD/C DELTA WING BOOSTER (B-9J)
B3	DELTA WING	GD/C	1244	6.0	LARC	0.0035	GD/C B-18E3 BOOSTER
B3	DELTA WING	GD/C	1264	8.0	AEDC	0.013	NR DELTA WING ORBITER, GD/C BOOSTER
B4	STRAIGHT WING	GD/C	1020	10.0	LARC	0.0035	CONVAIR STRAIGHT WING (B-8B) BOOSTER, CONVAIR DELTA WING (B-9J) BOOSTER
B4	STRAIGHT WING	GD/C	1024	8.0	LARC	0.0035	CONVAIR STRAIGHT WING (B-8B) BOOSTER, CONVAIR DELTA WING (B-9J) BOOSTER
B4	STRAIGHT WING	GD/C	1032	8.0	LARC	0.0035	CONVAIR STRAIGHT WING (B-8B) AND DELTA WING (B-9J) BOOSTERS, NAR STRAIGHT AND DELTA WING ORBITERS, CONVAIR B-95 BOOSTER WITH NAR DELTA WING ORBITER
B4	STRAIGHT WING	GD/C	1134	7.4	ARC	0.006	GD/C B-8B STRAIGHT WING BOOSTER

Table 1.3.2

Space Shuttle Phase B Wind Tunnel Test
Database Summary

Orbiter Heat Transfer

CODE	CONFIG. I.D	CONTRACTOR	DMS-DR#	MACH RANGE	FACILITY	MODEL SCALE	CONFIGURATIONS TESTED
01	DELTA BODY	LARC	1224	10.5	AEDC	NONE	LRC-DB DELTA BODY, LRC-SB STRAIGHT BODY
02	DELTA WING	GAC	1146	10.3	LARC	0.0067	GAC DELTA WING ORBITER ROS-NB2
02	DELTA WING	GAC	1154	8.0	GAC	0.0067	GAC DELTA WING ORBITER ROS-NB1, GAC DELTA WING ORBITER ROS-WB1
02	DELTA WING	GAC	1234	8.0	LARC	0.005	GRUMMAN H-33 ORBITER, H-33/HO ORBITER LAUNCH CONFIGURATION
02	DELTA WING	LMSC	1266	8.0	AEDC	0.012	040C DELTA WING ORBITER, 040A-L4 DELTA WING ORBITER
02	DELTA WING	MDAC	1170	7.5-13.0	CAL	0.007	MDAC CANARD BOOSTER WITH MDAC DELTA WING ORBITER, MDAC DELTA WING ORBITER, MDAC CANARD BOOSTER
02	DELTA WING	MDAC	1206	8.0	AEDC	0.011	MDAC DELTA WING ORBITER
02	DELTA WING	MDAC	1207	8.0	AEDC	0.011	MDAC CANARD BOOSTER AND DELTA WING ORBITER
02	DELTA WING	MDAC	1262	8.0	AEDC	0.011	MDAC CANARD BOOSTER AND DELTA WING ORBITER
02	DELTA WING	NR	1032	8.0	LARC	0.0035	CONVAIR STRAIGHT WING (B-8B) AND DELTA WING (B-9J) BOOSTERS, NAR STRAIGHT AND DELTA WING ORBITERS, CONVAIR B-95 BOOSTER WITH NAR DELTA WING ORBITER
02	DELTA WING	NR	1056	10.3	LARC	0.0035	NAR STRAIGHT WING ORBITER, NAR DELTA WING ORBITER
02	DELTA WING	NR	1056	8.0	LARC	0.0035	NAR STRAIGHT WING ORBITER, NAR DELTA WING ORBITER
02	DELTA WING	NR	1098	2.5-3.7	LARC	0.006	GD/C DELTA WING BOOSTER (B-9J), NAR STRAIGHT WING ORBITER, NAR DELTA WING ORBITER
02	DELTA WING	NR	1165	8.0	LARC	0.0035	NR-SD-9992-161B DELTA WING ORBITER
02	DELTA WING	NR	1177	8.0	AEDC	0.009	GD/C B-15B-2 BOOSTER, NAR 161B ORBITER
02	DELTA WING	NR	1180	7.4	ARC	0.006	NR 84B DELTA WING ORBITER
02	DELTA WING	NR	1231	8.0	AEDC	0.013	NR DELTA WING ORBITER

Table 1.3.2 - Concluded

Space Shuttle Phase B Wind Tunnel Test
Database Summary

Orbiter Heat Transfer

CODE	CONFIG. I.D.	CONTRACTOR	DMS-DR#	MACH RANGE	FACILITY	MODEL SCALE	CONFIGURATIONS TESTED
02	DELTA WING	NR	1252	7.4	ARC	0.009	NR 161B DELTA WING ORBITER
02	DELTA WING	NR	1264	8.0	AEDC	0.013	NR DELTA WING ORBITER, GD/C BOOSTER
03	STRAIGHT WING	NR	1032	8.0	LARC	0.0035	CONVAIR STRAIGHT WING (B-8B) AND DELTA WING (B-9J) BOOSTERS, NAR STRAIGHT AND DELTA WING ORBITERS, CONVAIR B-95 BOOSTER WITH NAR DELTA WING ORBITER
03	STRAIGHT WING	NR	1056	10.3	LARC	0.0035	NAR STRAIGHT WING ORBITER, NAR DELTA WING ORBITER
03	STRAIGHT WING	NR	1056	8.0	LARC	0.0035	NAR STRAIGHT WING ORBITER, NAR DELTA WING ORBITER
03	STRAIGHT WING	NR	1098	2.5-3.7	LARC	0.006	GD/C DELTA WING BOOSTER (B-9J), NAR STRAIGHT WING ORBITER, NAR DELTA WING ORBITER
03	STRAIGHT WING	NR	1131	7.4	ARC	0.006	NAR 130C STRAIGHT WING ORBITER
04	UNIQUE CONFIGS.	GAC	1178	10.3	LARC	0.00667	BOEING 1202 BOOSTER WITH GAC H-3T DELTA WING ORBITER, GAC H-3T DELTA WING ORBITER
04	UNIQUE CONFIGS.	LARC	1224	10.5	AEDC	NONE	LRC-DB DELTA BODY, LRC-SB STRAIGHT BODY

Table 1.3.3

Space Shuttle Phase B Wind Tunnel Test
Database Summary
Launch Heat Transfer

BOOS CODE	BOOSTER CONFIG. I.D.	BOOSTER CONTRA.	ORB CODE	ORBITER CONFIG. I.D	ORBITER CONTRA..	DMS-DR#	MACH RANGE	FAC.	MODEL SCALE	CONFIGURATIONS TESTED
B1	CANARD	MDAC	O2	DELTA WING	MDAC	1170	7.5-13.0	CAL	0.007	MDAC CANARD BOOSTER WITH MDAC DELTA WING ORBITER, MDAC DELTA WING ORBITER, MDAC CANARD BOOSTER
B1	CANARD	MDAC	O2	DELTA WING	MDAC	1238	6.0	LARC	0.0065	MDAC 256-20 BOOSTER, MDAC INTERNAL TANK ORBITER
B1	CANARD	MDAC	O2	DELTA WING	MDAC	1260	10.0	LARC	0.0065	MDAC BOOSTER, MDAC ORBITER
B1	CANARD	MDAC	O2	DELTA WING	MDAC	1262	8.0	AEDC	0.011	MDAC CANARD BOOSTER AND DELTA WING ORBITER
B1	CANARD	MDAC	O2	DELTA WING	MDAC	1263	2.3-3.7	LARC	0.0065	MDAC BOOSTER, MDAC ORBITER
B1	CANARD	MDAC/MMC	O2	DELTA WING	MDAC/MMC	1036	10.0	LARC	0.00325	MDC/MMC PHASE B BASELINE BOOSTER, MDC/MMC PHASE B LOW CROSS RANGE ORBITER, MDC/MMC PHASE B ALTERNATE BOOSTER, MDC/MMC PHASE B HIGH CROSS RANGE ORBITER
B1	CANARD	MDAC/MMC	O2	DELTA WING	MDAC/MMC	1036	8.0	LARC	0.00325	MDC/MMC PHASE B BASELINE BOOSTER, MDC/MMC PHASE B LOW CROSS RANGE ORBITER, MDC/MMC PHASE B ALTERNATE BOOSTER, MDC/MMC PHASE B HIGH CROSS RANGE ORBITER
B1	CANARD	MDAC/MMC	O3	STRAIGHT WING	MDAC/MMC	1036	10.0	LARC	0.00325	MDC/MMC PHASE B BASELINE BOOSTER, MDC/MMC PHASE B LOW CROSS RANGE ORBITER, MDC/MMC PHASE B ALTERNATE BOOSTER, MDC/MMC PHASE B HIGH CROSS RANGE ORBITER
B1	CANARD	MDAC/MMC	O3	STRAIGHT WING	MDAC/MMC	1036	8.0	LARC	0.00325	MDC/MMC PHASE B BASELINE BOOSTER, MDC/MMC PHASE B LOW CROSS RANGE ORBITER, MDC/MMC PHASE B ALTERNATE BOOSTER, MDC/MMC PHASE B HIGH CROSS RANGE ORBITER

ORIGINAL PAGE IS
OF POOR QUALITY

Table 1.3.3 - Continued

Space Shuttle Phase B Wind Tunnel Test
Database Summary

Launch Heat Transfer

BOOS CODE	BOOSTER CONFIG. I.D.	BOOSTER CONTRA.	ORB CODE	ORBITER CONFIG. I.D.	ORBITER CONTRA.	DMS-DR#	MACH RANGE	FAC.	MODEL SCALE	CONFIGURATIONS TESTED
B2	CYLINDRICAL	GAC	O2	DELTA WING	GAC	1234	8.0	LARC	0.005	GRUMMAN H-33 ORBITER, H-33/HO ORBITER LAUNCH CONFIGURATION
B2	CYLINDRICAL	MSFC	O2	DELTA WING	MSC	1278	8.0	LARC	0.006	MSC 040A ORBITER / HO DROP TANK, 2-156 INCH SRM
B2	CYLINDRICAL	TBC	O2	DELTA WING	GAC	1261	8.0	LARC	0.0033	MSC 040A ORBITER WITH CYLINDRICAL BOOSTER 979-160, CYLINDRICAL BOOSTER 979-160
B2	CYLINDRICAL	TBC	O4	UNIQUE CONFIGS.	GAC	1178	10.3	LARC	0.00667	BOEING 1202 BOOSTER WITH GAC H-3T DELTA WING ORBITER, GAC H-3T DELTA WING ORBITER
B3	DELTA WING	GD/C	O2	DELTA WING	NR	1032	8.0	LARC	0.0035	CONVAIR STRAIGHT WING (B-8B) AND DELTA WING (B-9J) BOOSTERS, NAR STRAIGHT AND DELTA WING ORBITERS, CONVAIR B-95 BOOSTER WITH NAR DELTA WING ORBITER
B3	DELTA WING	GD/C	O2	DELTA WING	NR	1098	2.5-3.7	LARC	0.006	GD/C DELTA WING BOOSTER (B-9J), NAR STRAIGHT WING ORBITER, NAR DELTA WING ORBITER
B3	DELTA WING	GD/C	O2	DELTA WING	NR	1145	7.80-7.95	LARC	0.004	GD/C BOOSTER B-9U WITH NAR ORBITER 161C, GD/C BOOSTER B-15B-2, GD/C BOOSTER B-9U
B3	DELTA WING	GD/C	O2	DELTA WING	NR	1177	8.0	AEDC	0.009	GD/C B-15B-2 BOOSTER, NAR 161B ORBITER
B3	DELTA WING	GD/C	O2	DELTA WING	NR	1264	8.0	AEDC	0.013	NR DELTA WING ORBITER, GD/C BOOSTER
B3	DELTA WING	GD/C	O3	STRAIGHT WING	NR	1032	8.0	LARC	0.0035	CONVAIR STRAIGHT WING (B-8B) AND DELTA WING (B-9J) BOOSTERS, NAR STRAIGHT AND DELTA WING ORBITERS, CONVAIR B-95 BOOSTER WITH NAR DELTA WING ORBITER
B3	DELTA WING	GD/C	O3	STRAIGHT WING	NR	1098	2.5-3.7	LARC	0.006	GD/C DELTA WING BOOSTER (B-9J), NAR STRAIGHT WING ORBITER, NAR DELTA WING ORBITER
B3	DELTA WING	LARC	O3	STRAIGHT WING	MSC	1016	10.0	LARC	0.00667	CLIPPED DELTA WING BOOSTER WITH MSC ORBITER

Table 1.3.3 - Concluded

Space Shuttle Phase B Wind Tunnel Test
Database Summary

Launch Heat Transfer

BOOS CODE	BOOSTER CONFIG. I.D.	BOOSTER CONTRA.	ORB CODE	ORBITER CONFIG. I.D.	ORBITER CONTRA.	DMS-DR#	MACH RANGE	FAC.	MODEL SCALE	CONFIGURATIONS TESTED
B4	STRAIGHT WING	GD/C	O2	DELTA WING	NR	1032	8.0	LARC	0.0035	CONVAIR STRAIGHT WING (B-8B) AND DELTA WING (B-9J) BOOSTERS, NAR STRAIGHT AND DELTA WING ORBITERS, CONVAIR B-95 BOOSTER WITH NAR DELTA WING ORBITER
B4	STRAIGHT WING	GD/C	O3	STRAIGHT WING	NR	1032	8.0	LARC	0.0035	CONVAIR STRAIGHT WING (B-8B) AND DELTA WING (B-9J) BOOSTERS, NAR STRAIGHT AND DELTA WING ORBITERS, CONVAIR 9-95 BOOSTER WITH NAR DELTA WING ORBITER
B5	UNIQUE CONFIGS.	LMSC	O1	DELTA BODY	LMSC	1143	8.0	LARC	0.0077	LOCKHEED STAGE-AND-ONE-HALF, LMSC DELTA BODY ORBITER

ORIGINAL PAGE IS
OF POOR QUALITY

TABLE 2.1

SPACE SHUTTLE PHASE B
DIGITAL DATABASE
BOOSTER AERODYNAMICS

FILE #	BCC	B-CONTRA	DR#	2-CHAR. CODE	# D/S's	# RECORDS
1	B1	MDAC	1035	CC	69	967
2			1139	N2	574	8037
3		MDAC/MMC	1054	CE	208	2185
4			1066	AD	86	1033
5			1077	CØ	96	1057
6			1080	AL	126	1387
7			1116	AR	76	799
8			1120	CZ	180	1981
9		MSFC	1164	N3	207	2899
10			1212	U9	132	1849
11	B2	LMSC	1242	61	112	1569
12		MSFC	1208	54	70	876
13			1226	55	33	463
14			1240	59	45	631
15			1245	63	15	211
16			1253	68	56	673
17		TBC	1128	DC	33	430
18			1214	Ø4	22	254
19			1228	D4	48	673
20			1275	D8	104	1249
21			1276	D9	16	209
22	B3/B4	GD/C	1029	C9	39	547
23			1030	C7	134	1877
24			1039	C8	108	1513
25	B3		1087	LS	68	753
26			1093	LG	88	1013
27			1102	28	106	1326
28			1109	CM	109	1527

TABLE 2.1 (Concluded)

SPACE SHUTTLE PHASE B
DIGITAL DATABASE
BOOSTER AERODYNAMICS

FILE #	BCC	B-CONTRA	DR#	2-CHAR. CODE	# D/S's	# RECORDS
29	B3	GD/C	1110	CV	90	1261
30			1121	AS	34	409
31			1141	BA	38	438
32			1152	35	26	365
33			1155	37	84	1009
34			1156	MB	78	937
35			1223	D6	96	1345
36		MDAC	1014	C2	17	239
37		MSFC	1001	19	107	1392
38		TBC	1209	53	85	1191
39			1220	Ø2	18	253
40	B4	GD/C	1025	C6	72	757
41			1100	LE	35	491
42		MSC	1033	G4	25	351
43		TBC	1079	U1	46	553
44			1111	BD	20	221
45			1158	CX	70	806
46			1191	D2	46	576
47	B5	CCSD	1046	AQ	14	169
48			1068	LL	12	169
49		GD/C	1006	T4	70	946
50		LARC	1015	L6	29	233
51			1017	L4	80	921
52			1019	L5	34	392
53			1193	MV	30	361

TABLE 2.2

SPACE SHUTTLE PHASE B
DIGITAL DATABASE
ORBITER AERODYNAMICS

FILE #	OCC	O-CONTRA	DR#	2-CHAR. CODE	# D/S's	# RECORDS
1	Ø1	GAC	1005	C3	30	251
2	↓	LMSC	1103	M2	52	625
3	↓	↓	1147	ME	98	1079
4	↓	↓	1157	MG	21	295
5	↓	↓	1169	MI	84	1009
6	Ø2	GAC	1053	CL	22	232
7	↓	↓	1081	CQ	43	431
8	↓	↓	1142	CW	66	661
9	↓	↓	1159	CT	48	491
10	↓	↓	1161	CR	16	161
11	↓	↓	1163	CS	33	331
12	↓	↓	1184	49	39	547
13	↓	↓	1189	MN(L)	52	651
14	↓	↓	1194	MQ	44	610
15	↓	↓	1195	MN(T)	26	313
16	↓	↓	1196	MN(U)	30	361
17	↓	↓	1203	MR	18	226
18	↓	↓	1211	MS	9	127
19	↓	↓	1216	MØ	14	197
20	↓	LARC	1123	LT	180	2071
21	↓	↓	1168	M5	60	631
22	↓	↓	1199	MX	117	1639
23	↓	↓	1229	Ø7	43	603
24	↓	↓	1232	Ø9	22	309
25	↓	↓	1233	ØA	12	169
26	↓	↓	1235	ØC	20	281
27	↓	↓	1268	ØM	27	379
28	↓	↓	1270	ØN	22	309
29	↓	LMSC	1153	36	46	645
30	↓	↓	1201	41	81	1135
31	↓	↓	1254	69	98	1324

TABLE 2.2 (Continued)

SPACE SHUTTLE PHASE B
DIGITAL DATABASE
ORBITER AERODYNAMICS

FILE #	OCC	O-CONTRA	DR#	2-CHAR. CODE	# D/S's	# RECORDS
32	Ø2/Ø3	MDAC	1028	A9	98	1177
33	Ø2		1040	CB	42	442
34			1041	CF	36	379
35			1067	CP	82	903
36			1071	AM/AU	92	967
37	Ø2/Ø3		1072	AJ	104	1041
38	Ø2		1074	CN	59	650
39			1083	AT	34	409
40			1086	LZ	20	231
41			1094	AX	56	729
42			1149	MF	32	385
43			1151	M4	32	449
44			1171	MJ	84	984
45			1172	ML	18	223
46			1173	MK	10	141
47			1175	LY	30	421
48		MMC	1003	17	18	208
49			1009	L2	14	141
50			1013	L3	9	118
51			1022	L8	30	391
52			1023	LA	28	337
53			1045	LF	48	553
54			1048	LA	6	85
55			1059	LH	56	645
56		MSC	1186	52	54	757
57			1202	BE	65	911
58			1215	Ø1	86	1033
59			1218	Ø6	28	393
60			1219	Ø5	45	631

TABLE 2.2 (Continued)

SPACE SHUTTLE PHASE B
DIGITAL DATABASE
ORBITER AERODYNAMICS

FILE #	OCC	O-CONTRA	DR#	2-CHAR. CODE	# D/S's	# RECORDS
61	Ø2	MSC	1221	GB	130	1431
62	↓	↓	1243	62	60	745
63	↓	↓	1250	BF	34	477
64	↓	↓	1258	ØF	62	838
65	↓	↓	1274	74	4	57
66	↓	NR	1021	A3	44	507
67	Ø2/Ø3	↓	1026	AE	52	625
68	↓	↓	1027	21	254	2922
69	Ø2	↓	1031	A4	38	419
70	↓	↓	1037	C5	58	813
71	Ø2/Ø3	↓	1043	23	76	875
72	↓	↓	1076	27	173	2016
73	Ø2	↓	1078	AF/AE	56	665
74	↓	↓	1084	LQ	74	852
75	↓	↓	1088	LV	22	254
76	↓	↓	1092	RT	6	79
77	↓	↓	1095	LU	34	396
78	↓	↓	1096	LP	44	551
79	↓	↓	1097	MO	20	271
80	↓	↓	1101	M7	34	392
81	Ø2/Ø3	↓	1104	AK	91	1072
82	Ø2	↓	1105	LØ	54	649
83	↓	↓	1106	LN	27	379
84	↓	↓	1107	M1	24	289
85	↓	↓	1113	M9	54	622
86	↓	↓	1114	26	4	53
87	↓	↓	1124	CJ	108	1297
88	↓	↓	1126	29	44	507
89	↓	↓	1144	MD	30	381

TABLE 2.2 (Concluded)

SPACE SHUTTLE PHASE B
DIGITAL DATABASE
ORBITER AERODYNAMICS

FILE #	OCC	O-CONTRA	DR#	2-CHAR. CODE	# D/S's	# RECORDS
1	Ø3	MDAC	1090	CD	231	2542
2		MSC	1002	A6	148	1555
3			1004	L1	58	668
4			1007	C1	149	1491
5			1008	G1	26	313
6			1011	A7	42	463
7			1012	A5	36	397
8			1057	G3	158	1581
9			1060	G6	163	1794
10			1062	G7	62	651
11			1073	G2	86	990
12			1205	G9	180	2341
13		NR	1010	C4	108	1513
14			1034	CG	90	1141
15			1049	L9	46	645
16			1064	LD	18	208
17			1069	LI	118	1340
18			1082	AF/AE	158	1853
19	Ø4	GAC	1112	BB	21	252
20		LARC	1018	L7	64	737

TABLE 2.3

SPACE SHUTTLE PHASE B
DIGITAL DATABASE
LAUNCH AERODYNAMICS

FILE #	BCC	B-CONTRA	OCC	O-CONTRA	DR#	2-CHAR CODE	# D/S's	# RECORDS
1	B1	MDAC	Ø2/Ø3	MDAC	1065	AB	132	1618
2			Ø2		1108	T8	882	9691
3					1118	AC	144	1837
4		MDAC/MMC			1117	LR	154	1721
5	B1/B3				1190	MU	16	225
6	B1	TBC		GAC	1148	34	118	1417
7		MDAC	Ø4	MDAC	1099	AY	24	265
8					1166	43	12	145
9	B2	GD/C	Ø2	MSC	1204	50	41	560
10	B2/B3				1210	58	76	913
11	B2	NDAC			1230	D7	1051	13235
12		MSFC		LMSC	1256	71	88	1233
13					1272	71	62	869
14				MSC	1241	60	44	397
15					1249	65	24	337
16					1251	66	26	365
17					1265	ØH	21	295
18					1267	BG	120	1681
19		NR		NR	1185	51	26	313
20		TBC		MSC	1227	57	36	505
21		MSFC	Ø4	GAC	1181	46	16	193
22	B3/B4	GD/C	Ø2/Ø3	NR	1052	CA	99	1219
23	B3		Ø2		1127	AZ	55	606
24					1130	32	140	1751
25					1237	ØB	26	365
26		MMC		MSC	1213	56	42	589
27	B3/B4	MSC	Ø2/Ø3		1115	CU	104	1249
28		MSC/MDAC		MSC/MDAC	1038	AA	227	2569
29	B3	TBC	Ø2/Ø4	MSC	1183	48	74	1037
30		MDAC	Ø3		1047	LB	10	86

TABLE 2.3 (Continued)

SPACE SHUTTLE PHASE B
DIGITAL DATABASE
LAUNCH AERODYNAMICS

FILE #	BCC	B-CONTRA	OCC	O-CONTRA	DR#	2-CHAR CODE	# D/S's	# RECORDS
31	B3	MDAC	Ø3	MSC	1061	LC	10	91
32	B3/B4	MSC	↓	↓	1058	CH	80	881
33	B3	GD/C	Ø4	NR	1119	31	29	407
34	↓	↓	↓	↓	1162	39	25	351

TABLE 2.3 (Concluded)

SPACE SHUTTLE PHASE B
DIGITAL DATABASE
LAUNCH AERODYNAMICS

FILE #	BCC	B-CONTRA	OCC	O-CONTRA	DR#	2-CHAR CODE	# D/S's	# RECORDS
1	B4	GD/C	Ø2/Ø3	NR	1050	AG	14	169
2	↓	↓	↓	↓	1051	22	76	875
3	↓	↓	↓	↓	1075	AH	52	696
4	↓	MSC	Ø3	MSC	1042	AN	3	31
5	↓	↓	↓	↓	1063	AØ	90	1006
6	↓	TBC	Ø4	GAC	1122	AW	26	330
7	↓	↓	↓	↓	1136	BC	5	54
8	↓	↓	↓	↓	1137	BC	30	313
9	B5	LMSC	Ø1	LMSC	1085	AV	20	221
10	↓	LARC	Ø2	NR	1197	MW	98	1167
11	↓	↓	↓	↓	1198	MY	50	576
12	↓	↓	↓	↓	1200	MZ	36	429
13	↓	MMC	Ø2/Ø4	MMC	1182	47	26	313
14	↓	TBC	Ø2	NR	1055	25	9	127
15	↓	↓	↓	↓	1091	30	19	267
16	↓	↓	Ø3	GAC	1044	24	18	253
17	↓	MMC	Ø4	↓	1188	45	23	323
18	↓	TBC	↓	↓	1140	33	22	309
19	↓	↓	↓	↓	1187	44	20	261

TABLE 2.4

SPACE SHUTTLE PHASE B
DIGITAL DATABASE
LAUNCH AIRLOADS AND HEAT TRANSFER

FILE #	BCC	B-CONTRA	OCC	O-CONTRA	DR#	2-CHAR CODE	# D/S's	# RECORDS
AIRLOADS								
20	B1	MDAC	Ø2	MDAC	1174	T8	891	11881
21	↓	↓	↓	↓	1222	TC	113	5490
22	B2	MSFC	↓	MSFC	1259	67	48	1315
23	B4	GD/C	Ø2/Ø3	NR	1129	AX	130	4959
HEAT TRANSFER								
24	B1	MDAC	Ø2	MDAC	1263	ØL	21	247

APPENDIX A-1

MODEL FIGURES

BOOSTER AERODYNAMICS

ORIGINAL PAGE IS
OF POOR QUALITY

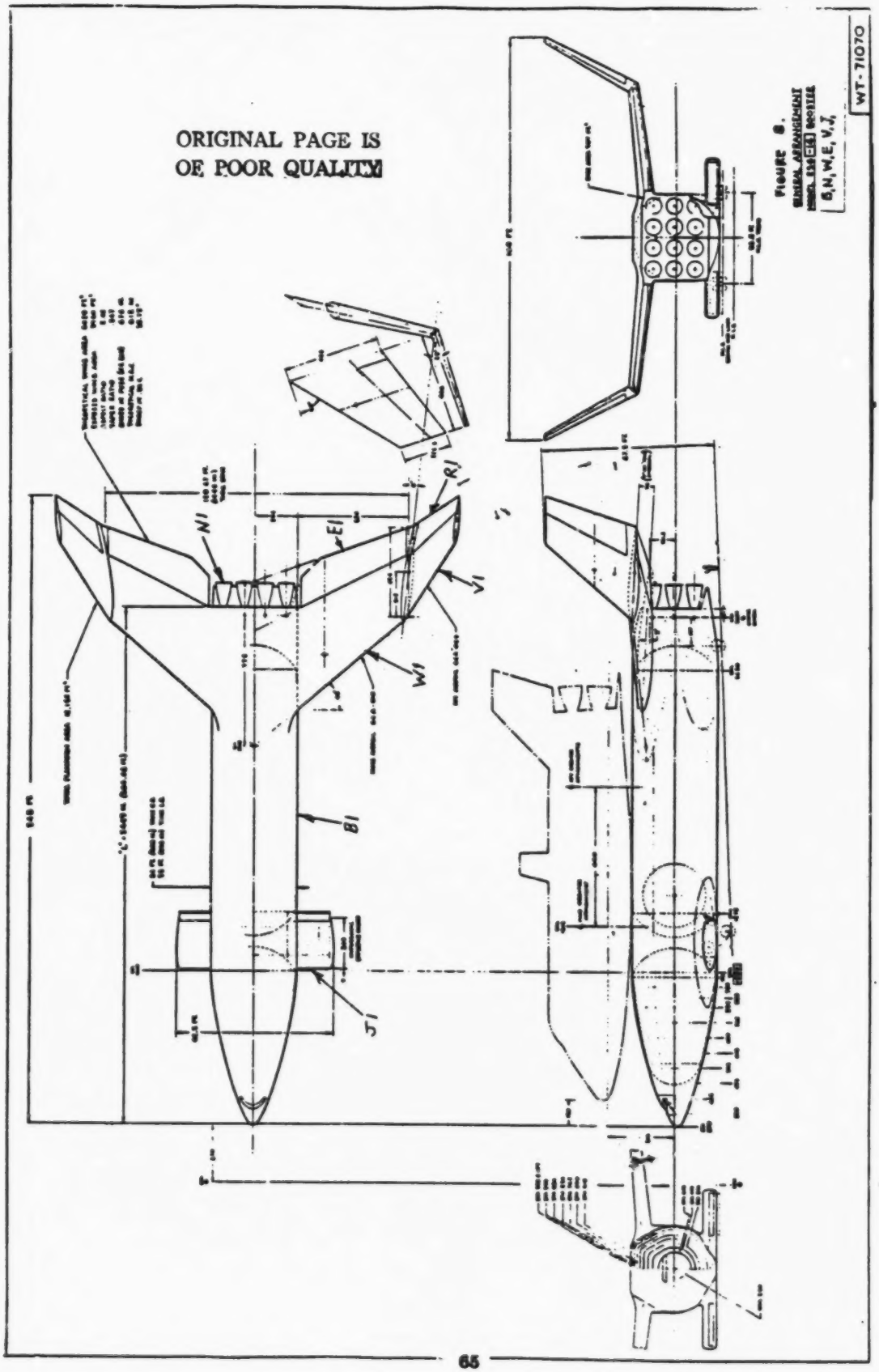

PRECEDING PAGE BLANK NOT FILMED

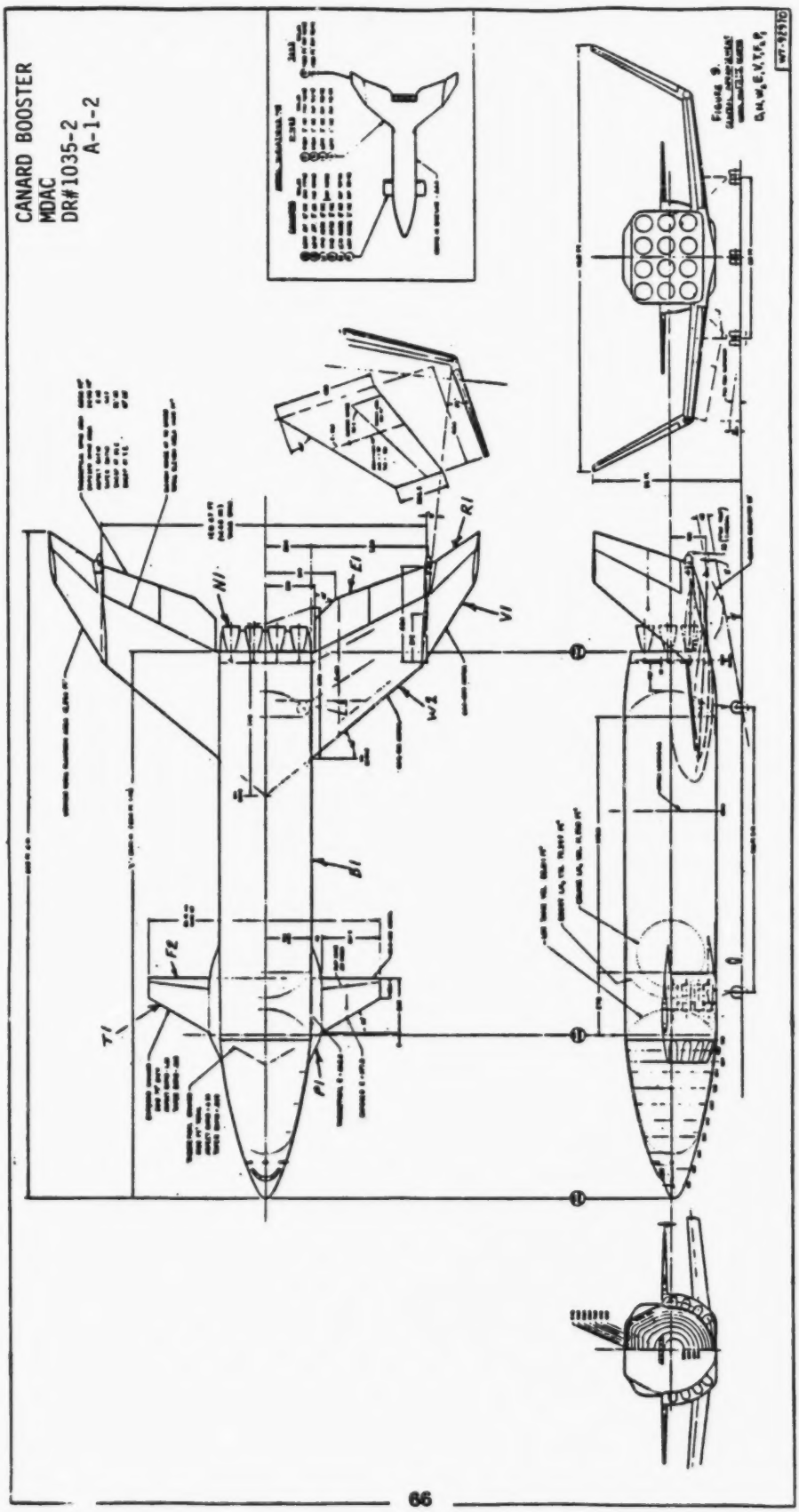

ORIGINAL PAGE IS
OF POOR QUALITY

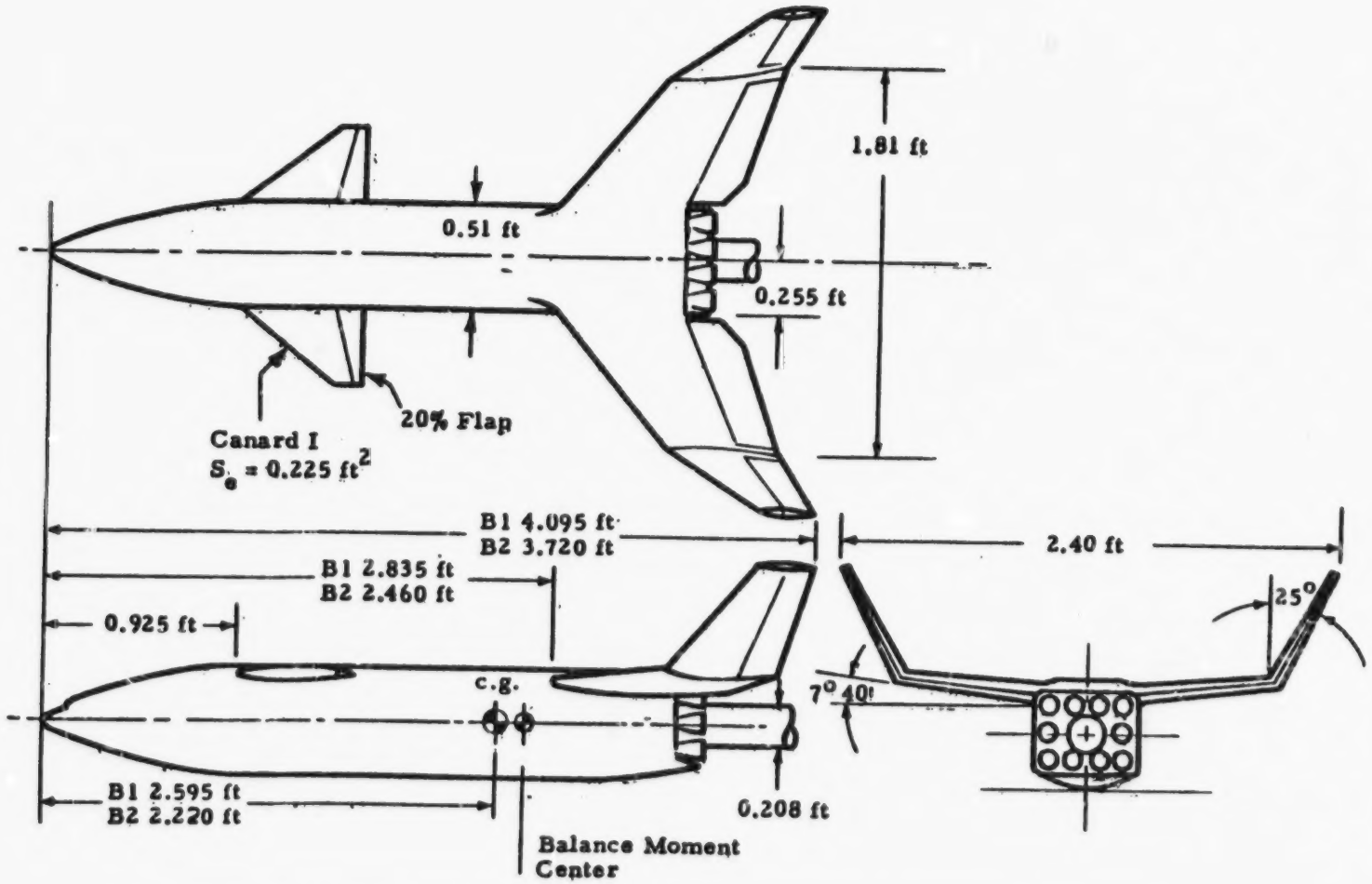

Fig. 2. General Arrangement of a Typical High Wing – High Canard Configuration

LMSC-HREC D162856-A

CANARD BOOSTER
MDAC
DR#1139
A-1-3

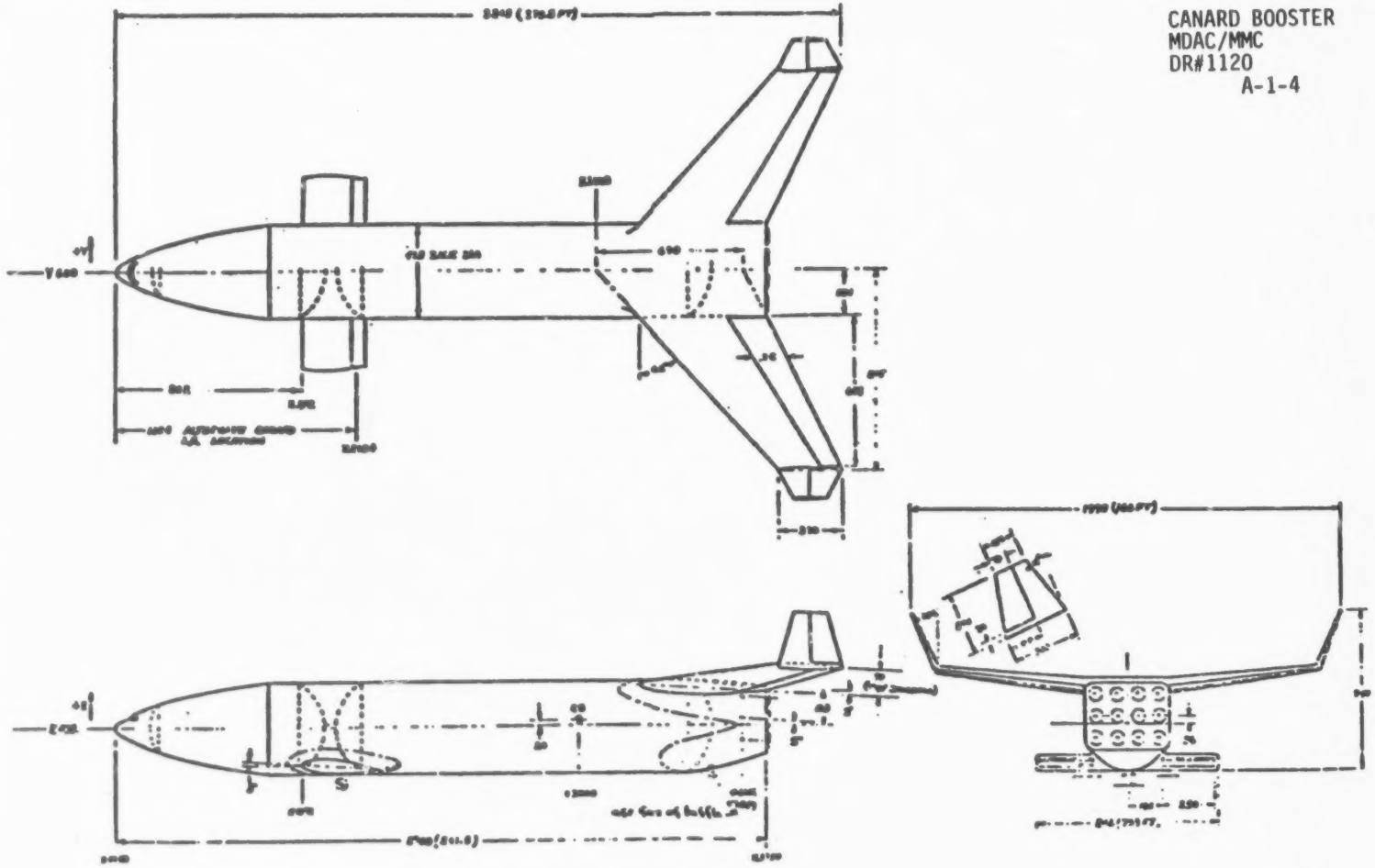

FIGURE 2. BOOSTER GENERAL ARRANGEMENT

ORIGINAL PAGE IS
OF POOR QUALITY

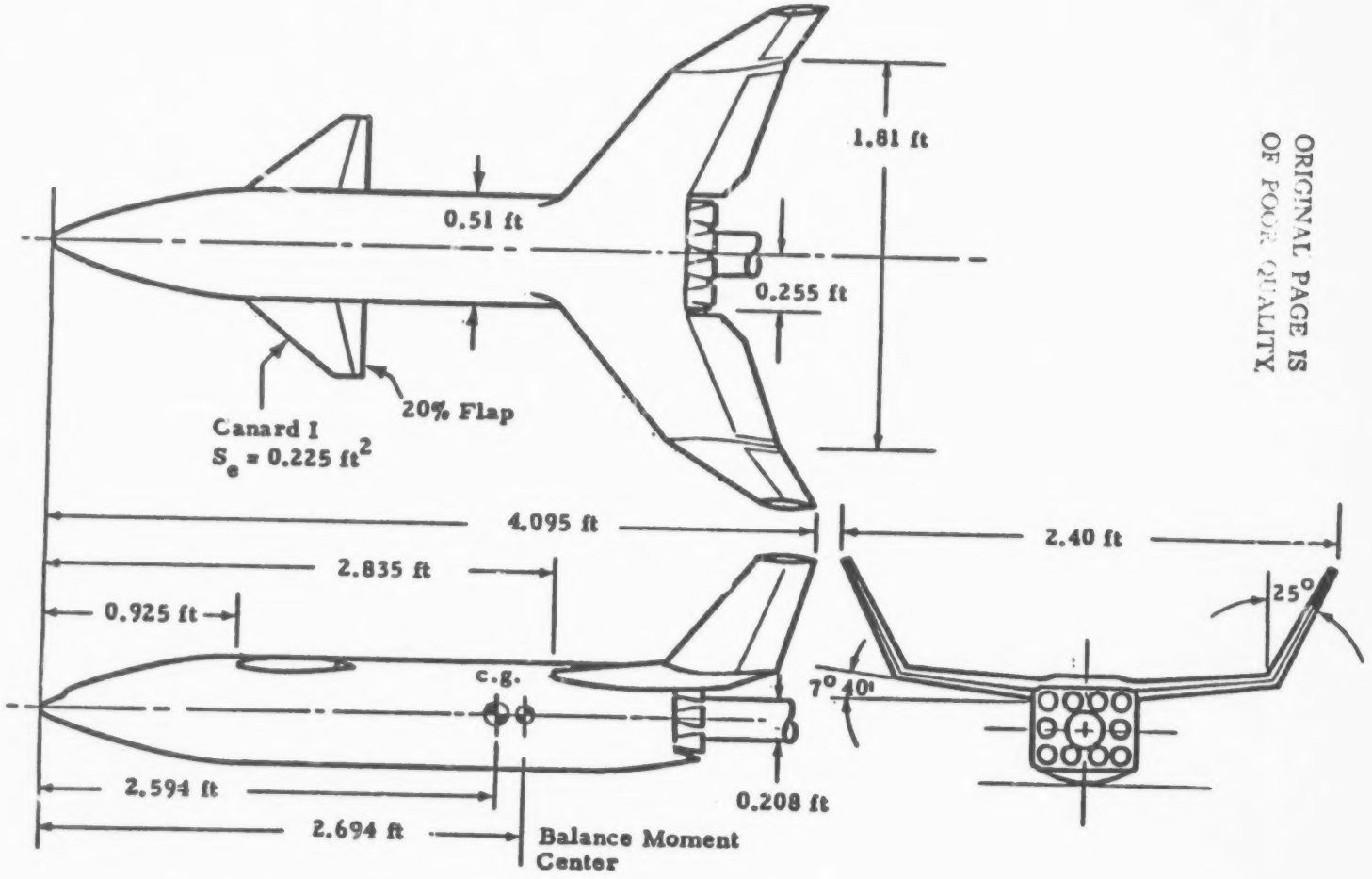

Fig. 2- General Arrangement of a Typical High Wing – High Canard Configuration

CANARD BOOSTER
MSFC
DR#1192
A-1-5

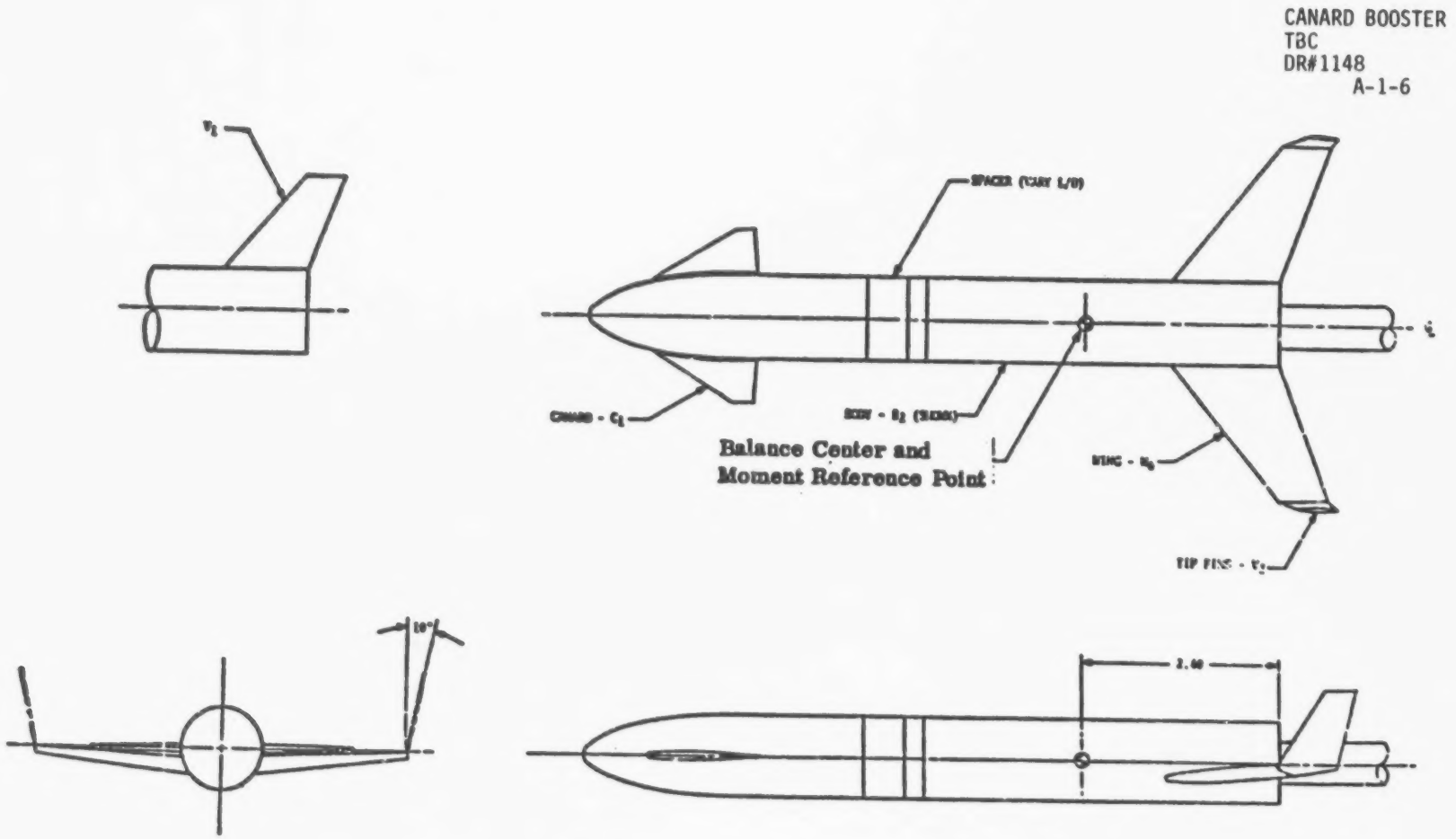

FIGURE 5. 0.002456 SCALE AR1198I-1 BOOSTER MODEL

CYLINDRICAL BOOSTER
GD/C
DR#1204
A-1-7

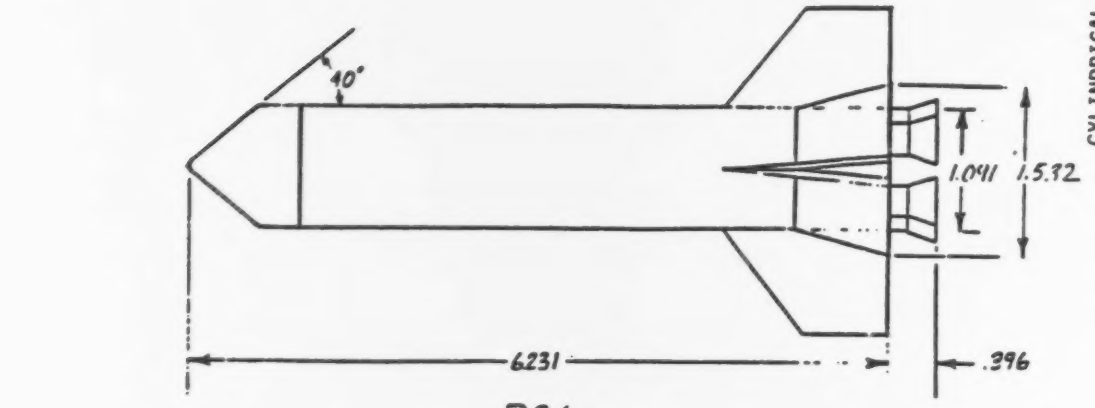

B34

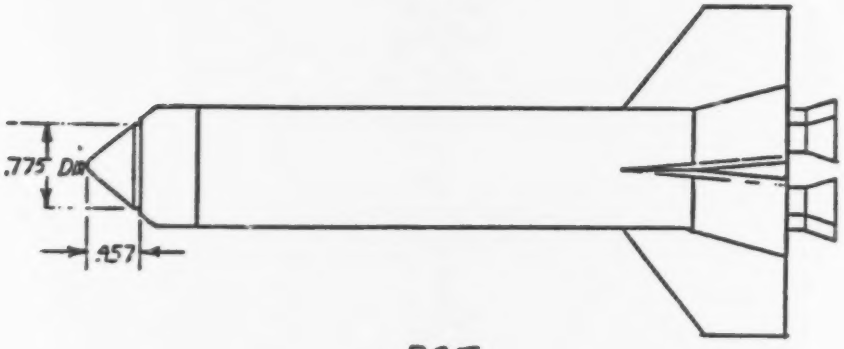

B35

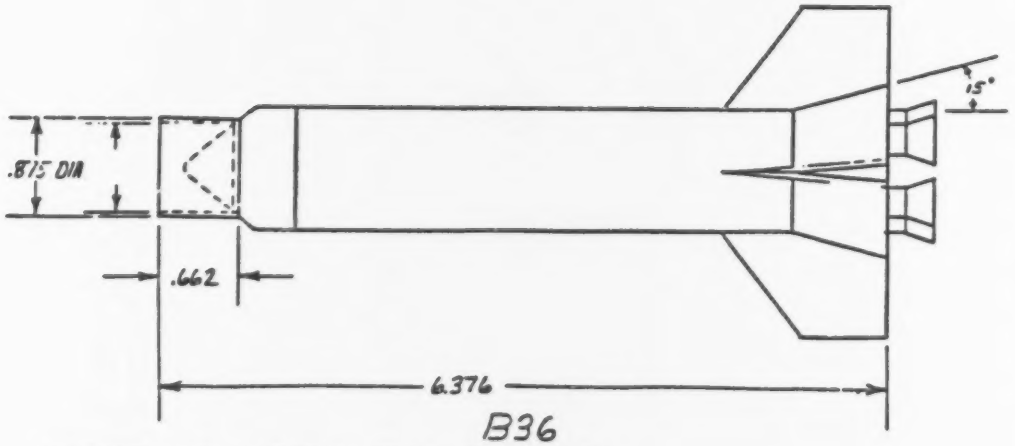

B36

FIGURE 3. BODY B34, B35, B36

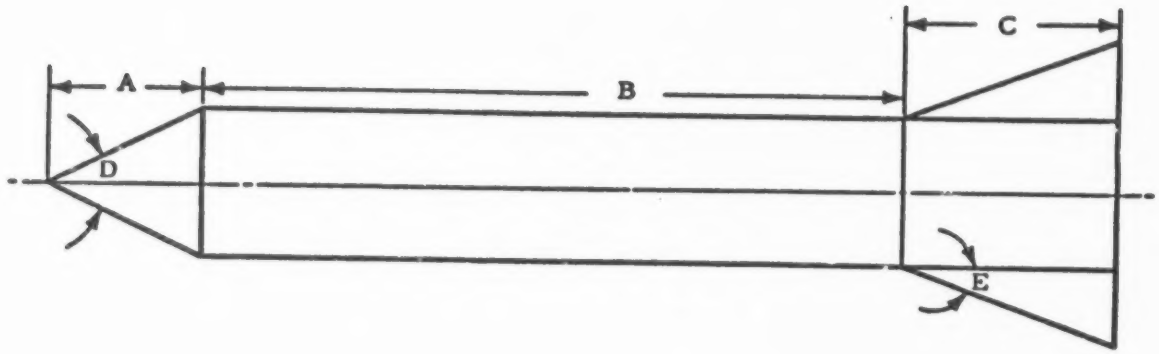

A		B		C		D (deg)		E (deg)	
N1	.9648	C1	2.457	F0	1.35	N1	50	F0	0
N2	.6929	C2	3.357	F1	1.35	N2	66	F1	7.5
N3	.5363	C3	4.257	F2	1.35	N3	80	F2	15
				F3	1.35			F3	20

NOTE: All dimensions in inches (Model Scale)

Fig. 2 - Model Geometry
(a) Cones, Cylinders and Flares

BOOSTER, B_1 & B5

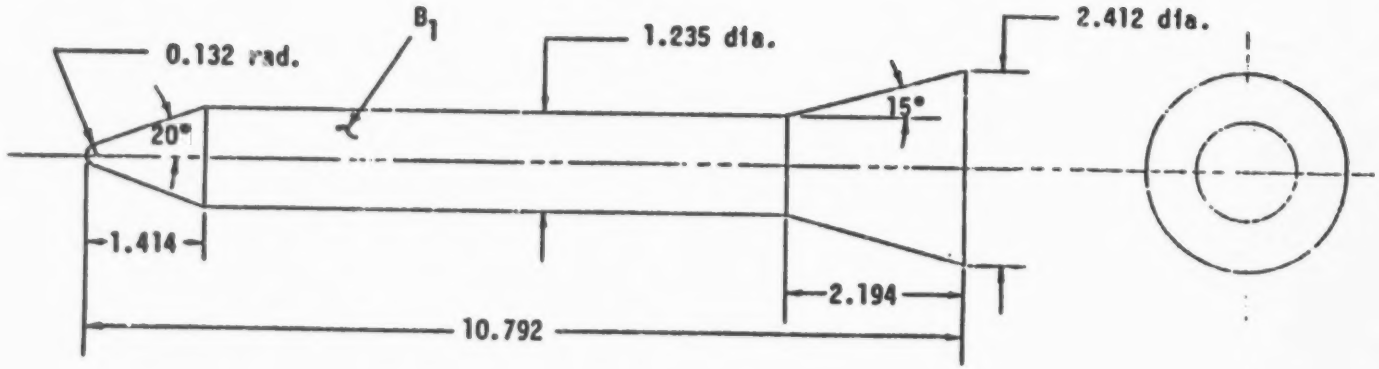

All dimensions are model scale, in inches.

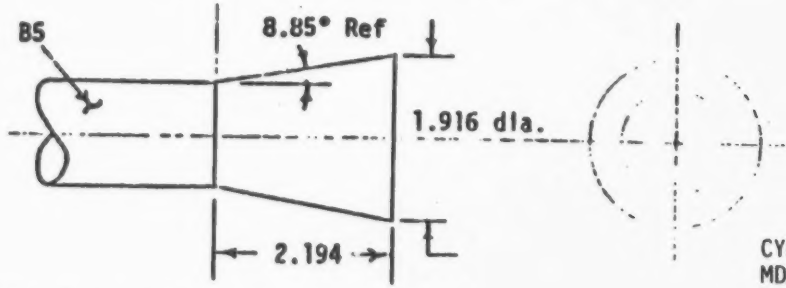

Figure 32. Boosters, B_1 and B_5

CYLINDRICAL BOOSTER
MDAC
DR#1230
A-1-9

CYLINDRICAL BOOSTER
MSFC
DR#1226
A-1-10

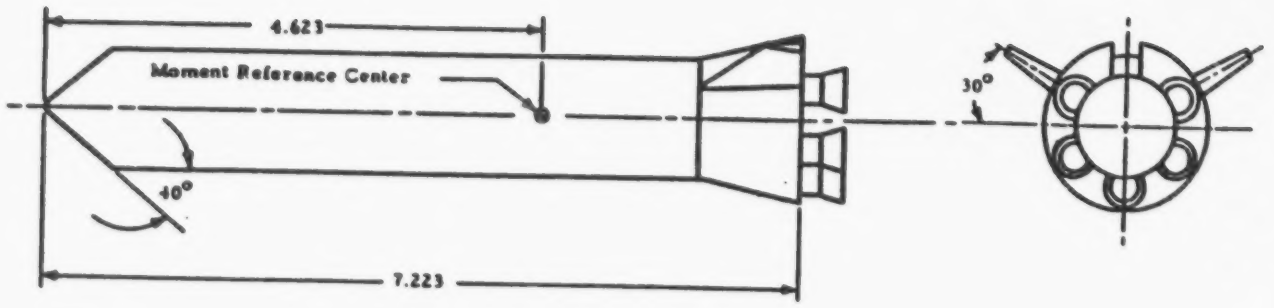

Fig. 2. MSFC Pressure Fed Booster N1B1F2 Moment Reference Center Location

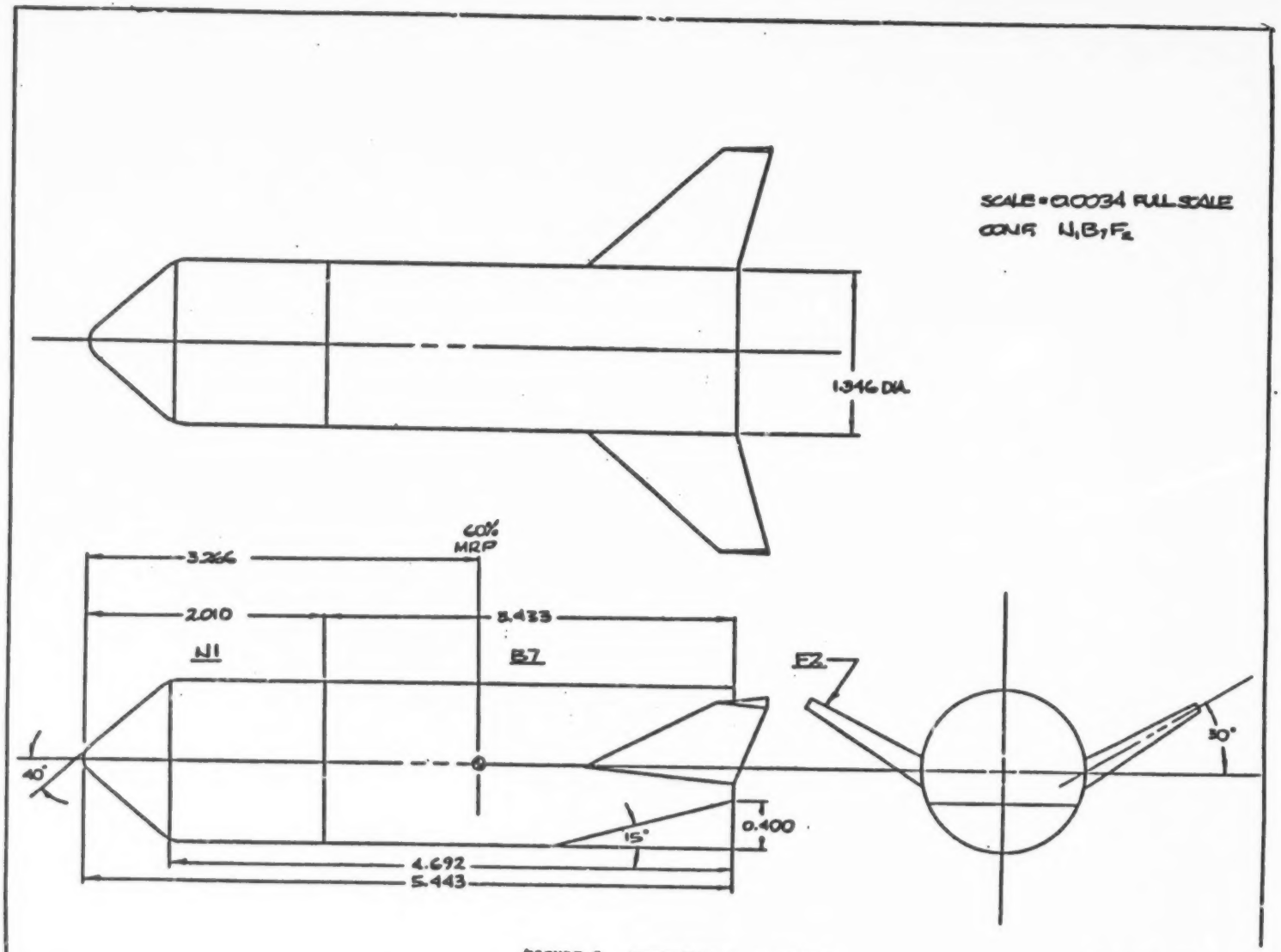

FIGURE 2. MSFC PUMP FED BOOSTER

CYLINDRICAL BOOSTER
MSFC
DR#1245

CYLINDRICAL BOOSTER
MSFC
DR#1253
A-1-12

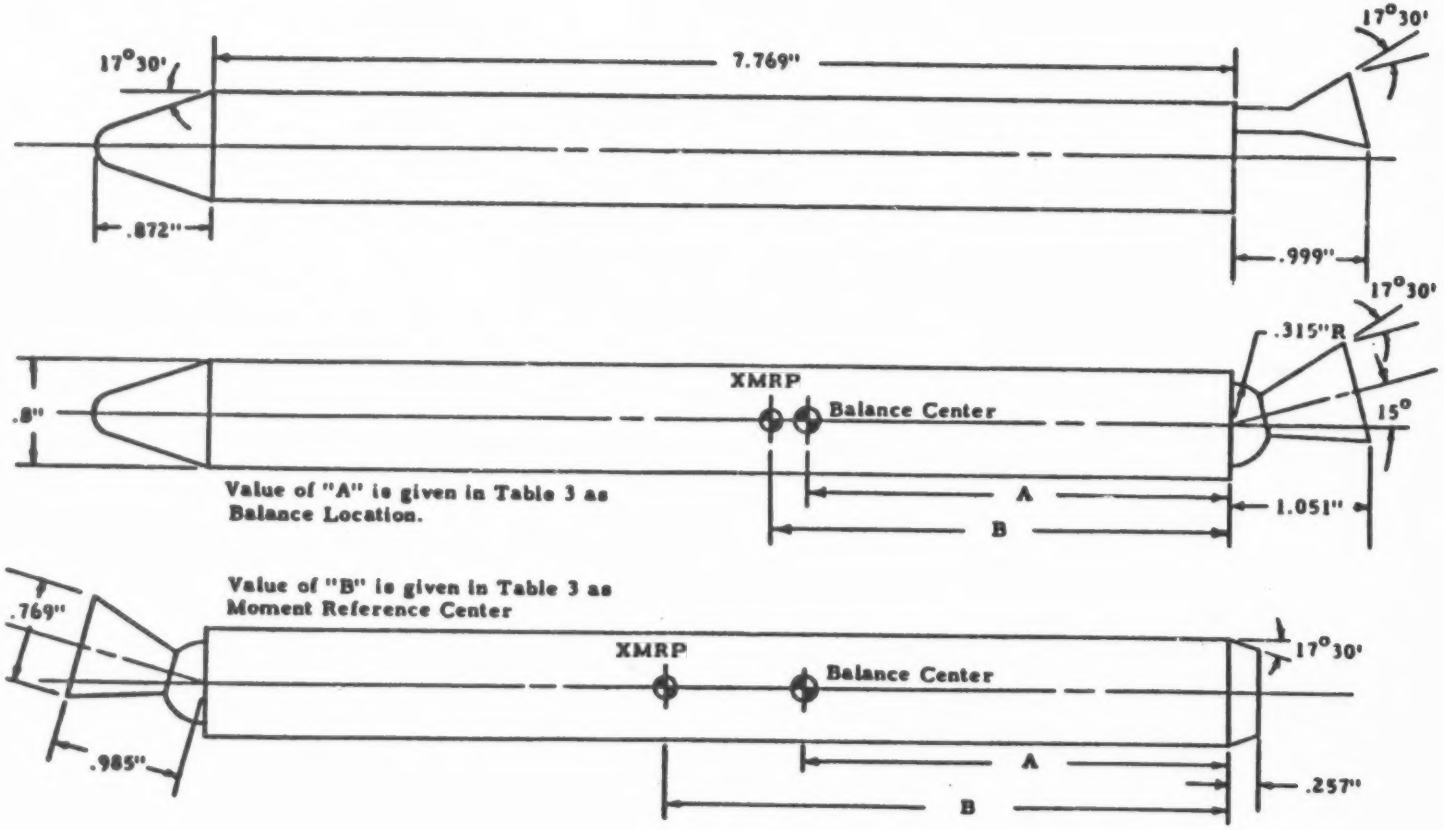

Fig. 1 - 0.00513 Scale 156-Inch SRM Geometry (MSFC Model 446)

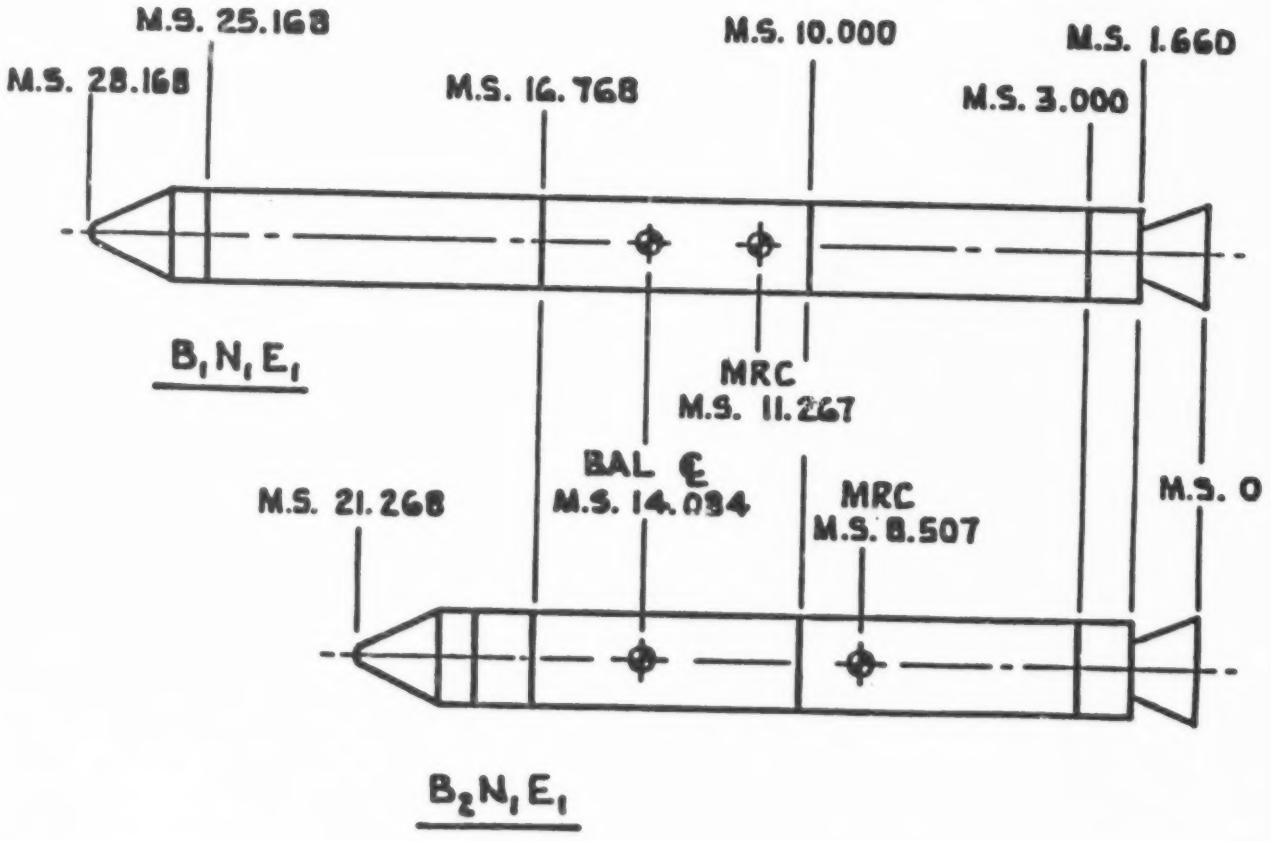

Figure 1. Configurations $B_1N_1E_1$ and $B_2N_1E_1$

CYLINDRICAL BOOSTER
TBC
DR#1128
A-1-13

CYLINDRICAL BOOSTER
TBC
D[illegible]1214 A-1-14

AX 1230 I - 1

MODEL ASSEMBLY (TYP)
BASE LINE CONFIGURATION $B_1S_1V_1^{30}$

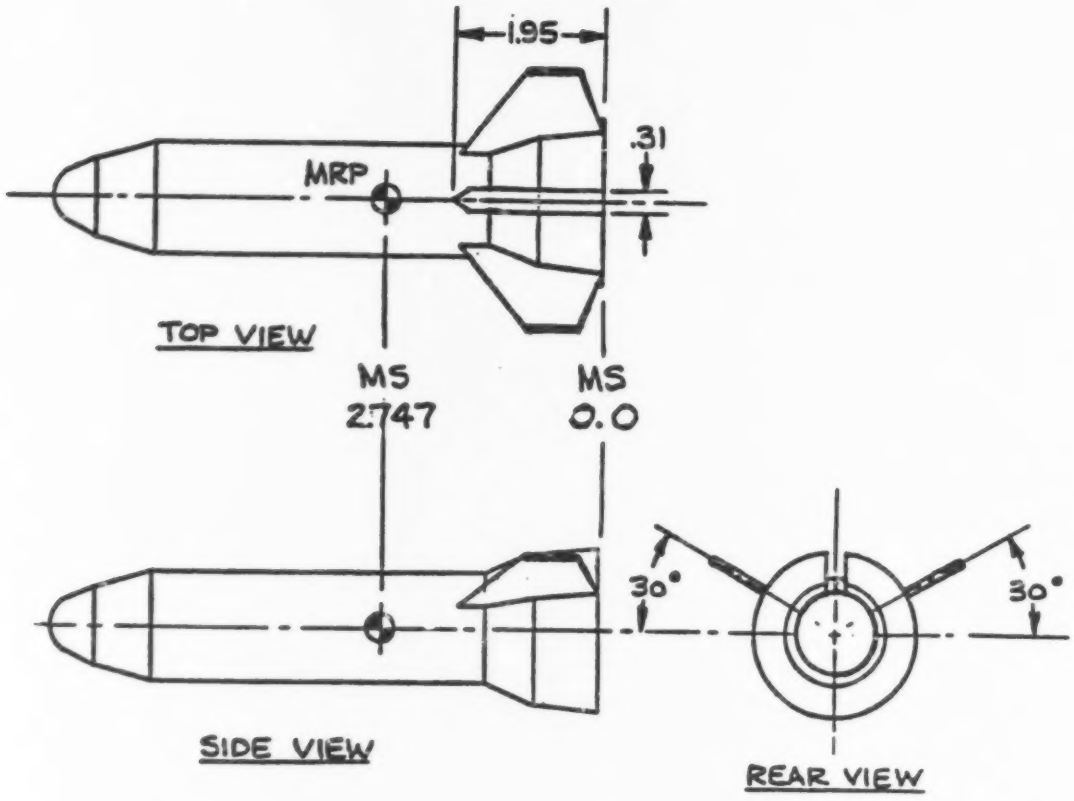

Figure 2.

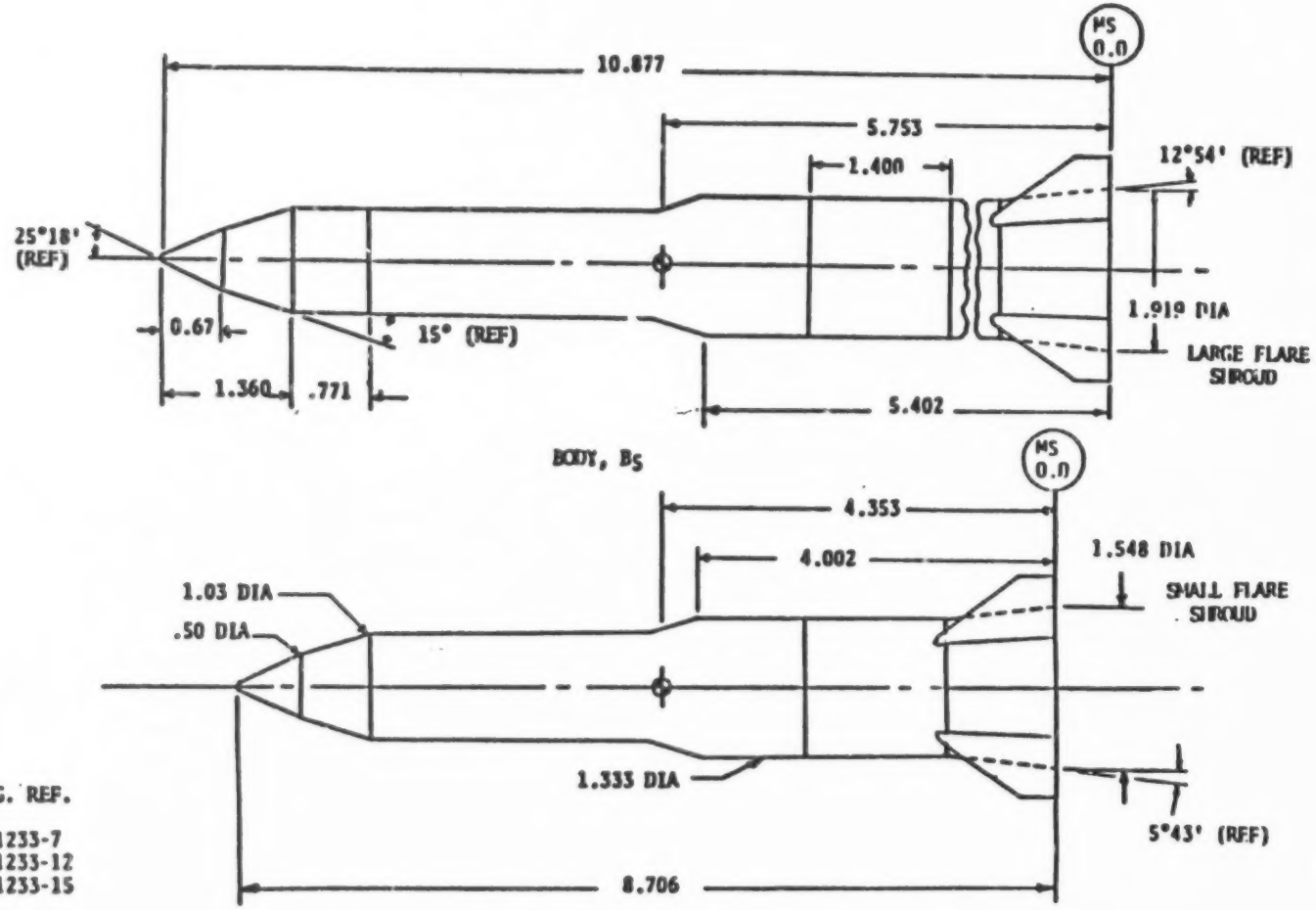

DWG. REF.

1233-7
1233-12
1233-15

FIGURE 4 - BODY, B_5

CYLINDRICAL BOOSTER
TBC
DR#1227
A-1-15

CYLINDRICAL BOOSTER
TBC
DR#1276
A-1-16

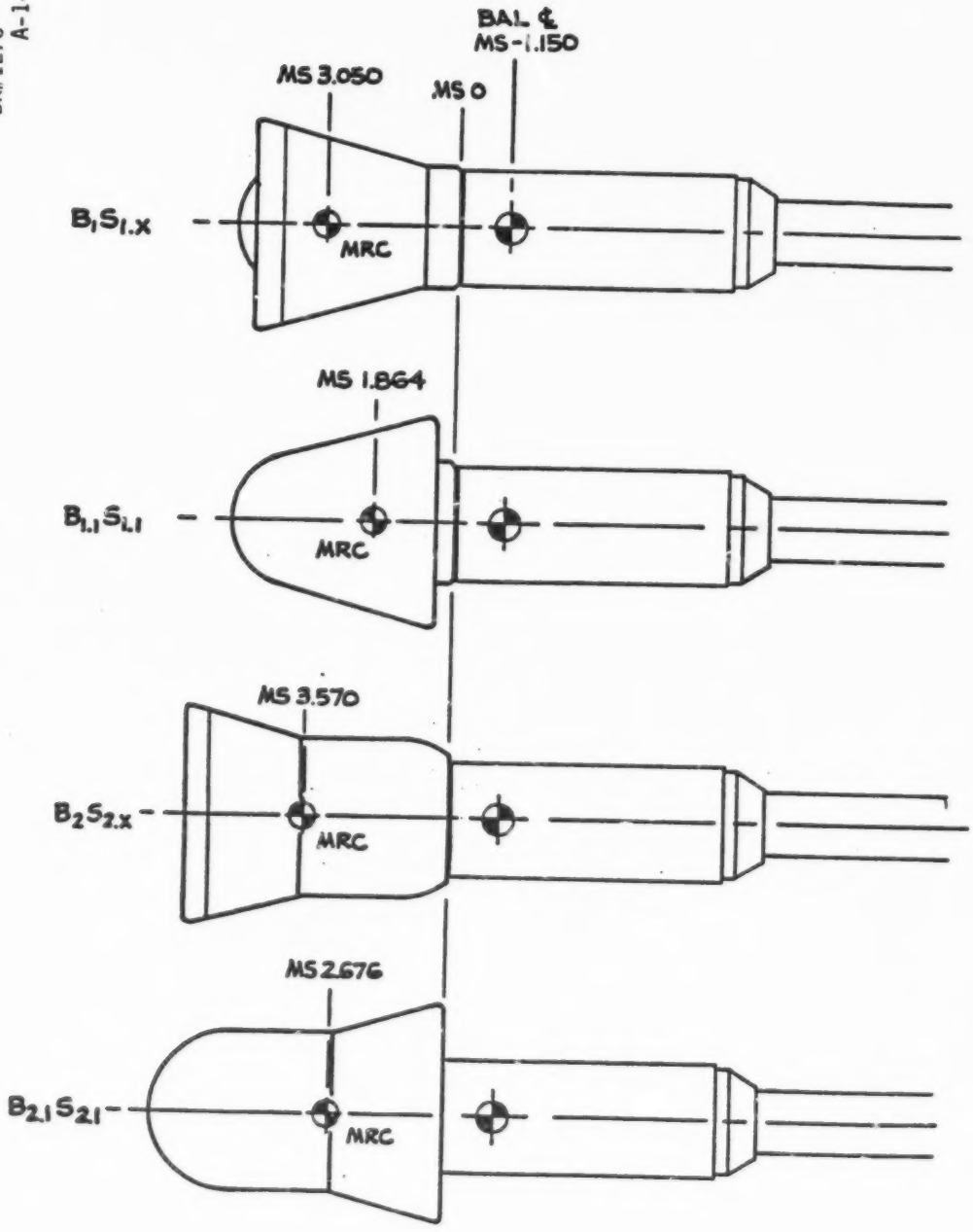

Figure 3. Model Comparison

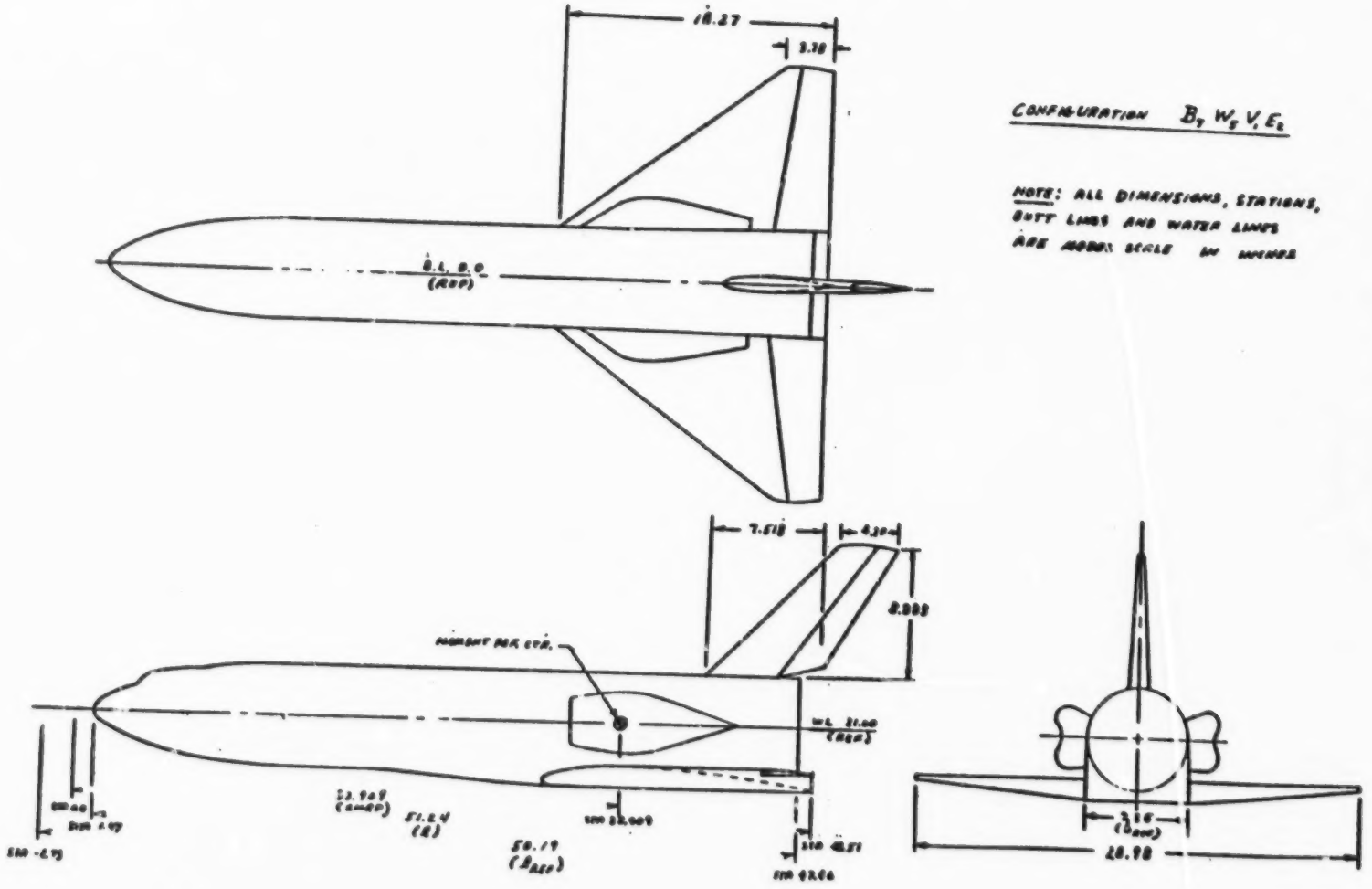

Figure 3. GD/Convair Delta Wing Space Shuttle Booster.

DELTA WING BOOSTER
GD/C
DR#1030
A-1-17

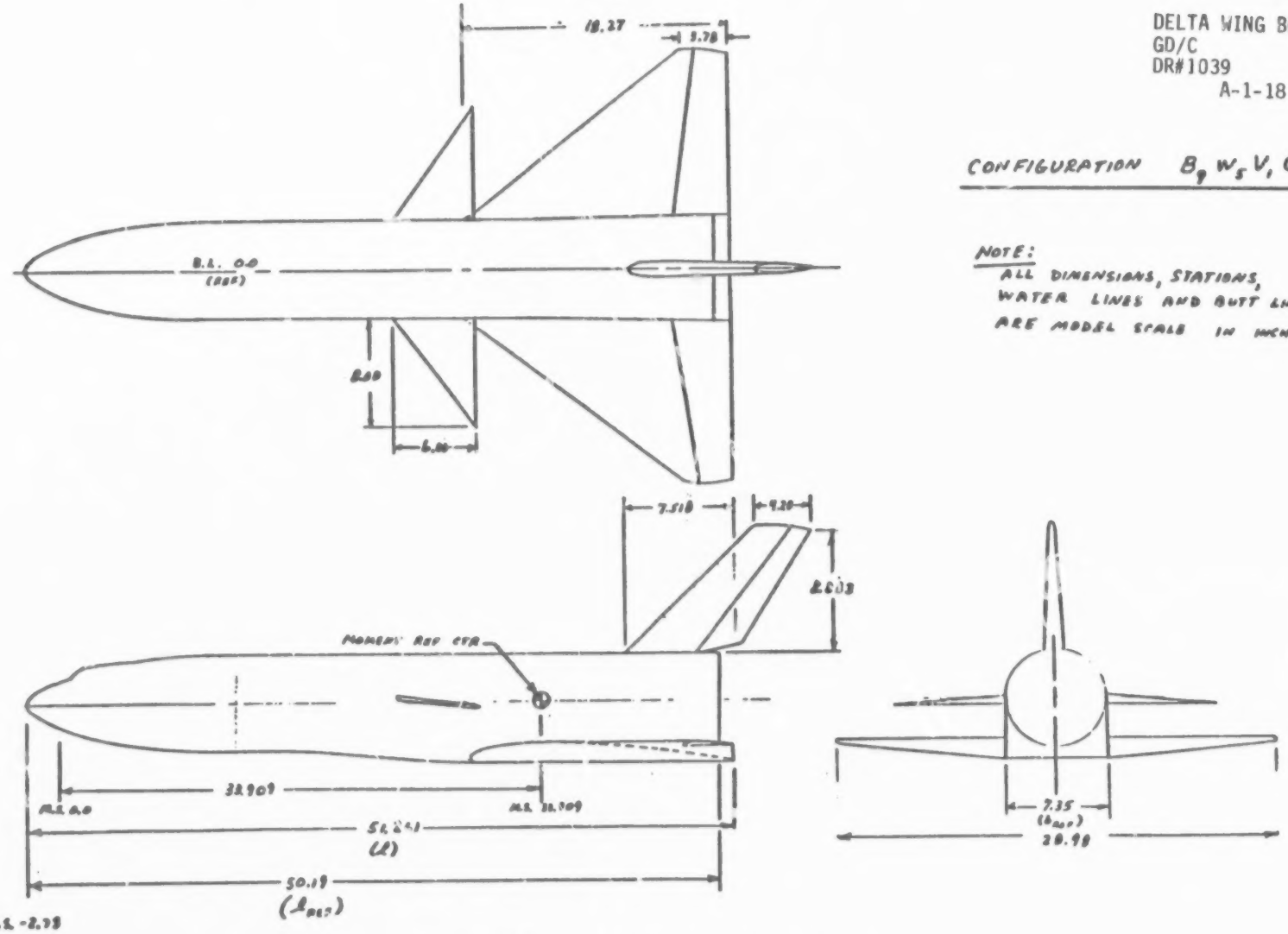

Figure 3. GD/Convair Delta Wing Space Shuttle Booster.

B-158-1 GENERAL ARRANGEMENT

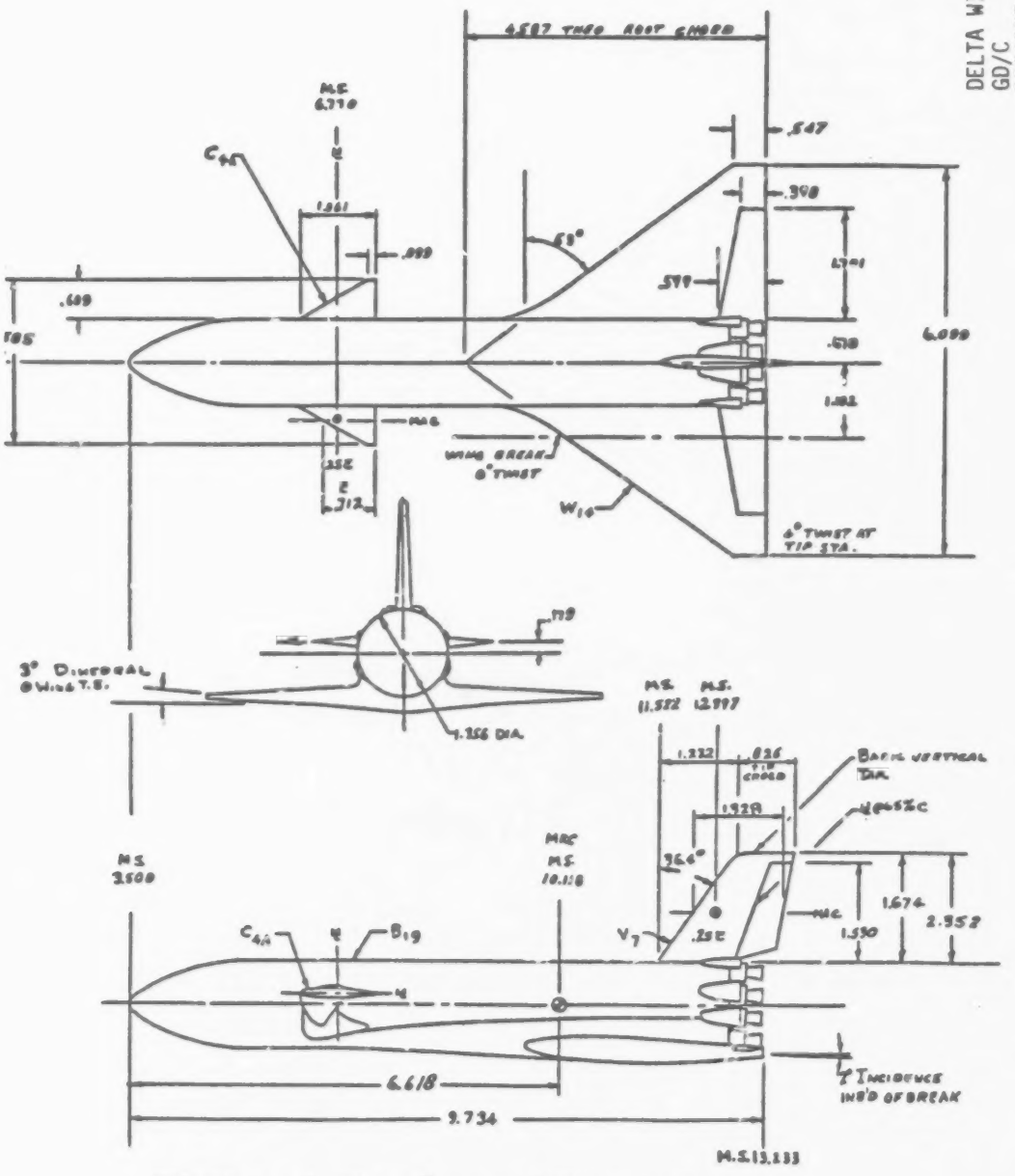

FIGURE 1. B-158-1 GENERAL ARRANGEMENT

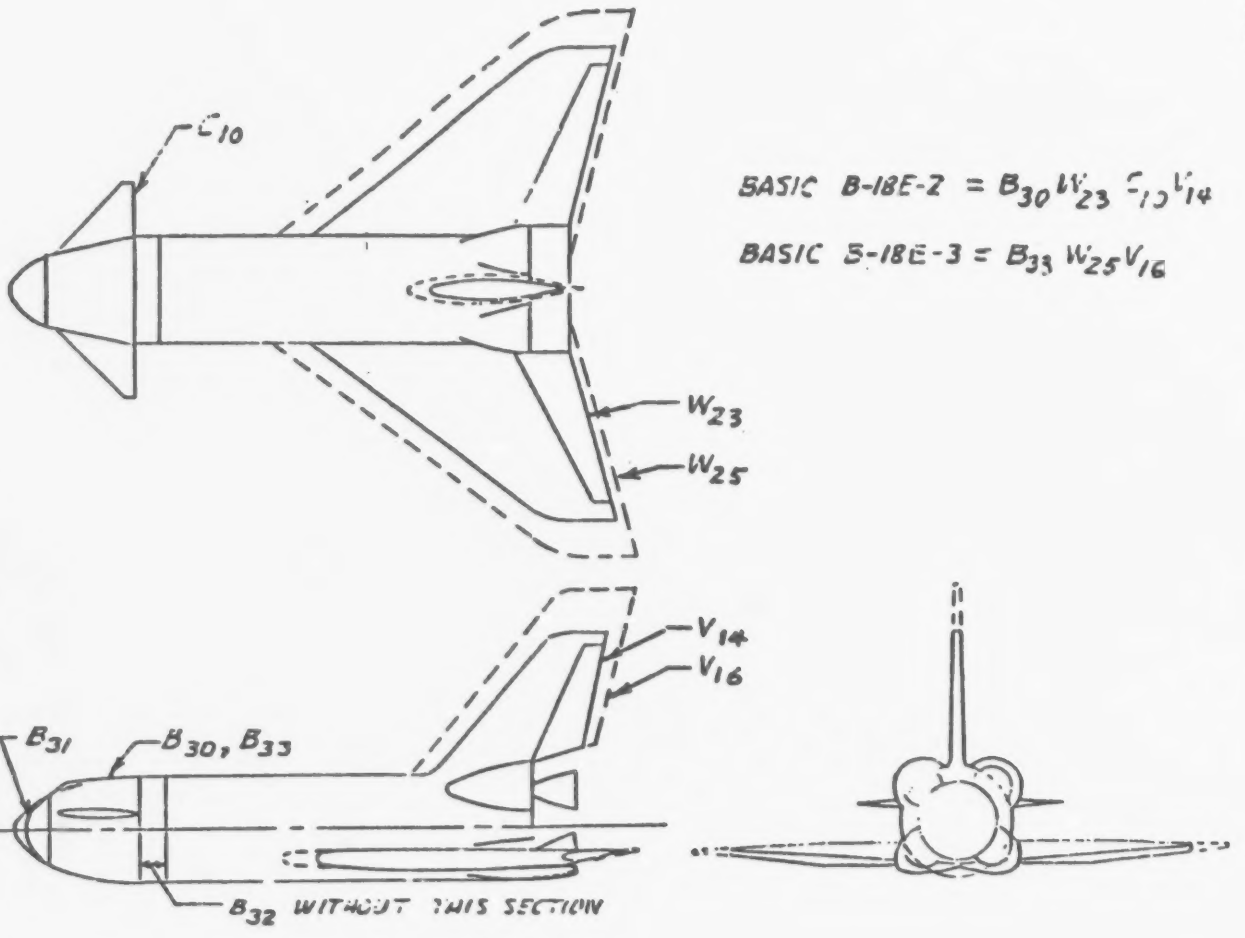

BASIC B-18E-2 = $B_{30} W_{23} C_{10} V_{14}$

BASIC B-18E-3 = $B_{33} W_{25} V_{16}$

FIG 3. B-18E-2 AND B-18E-3, 3-VIEWS AND MODEL COMPONENT IDENTIFICATION

ORIGINAL PAGE IS
OE POOR QUALITY

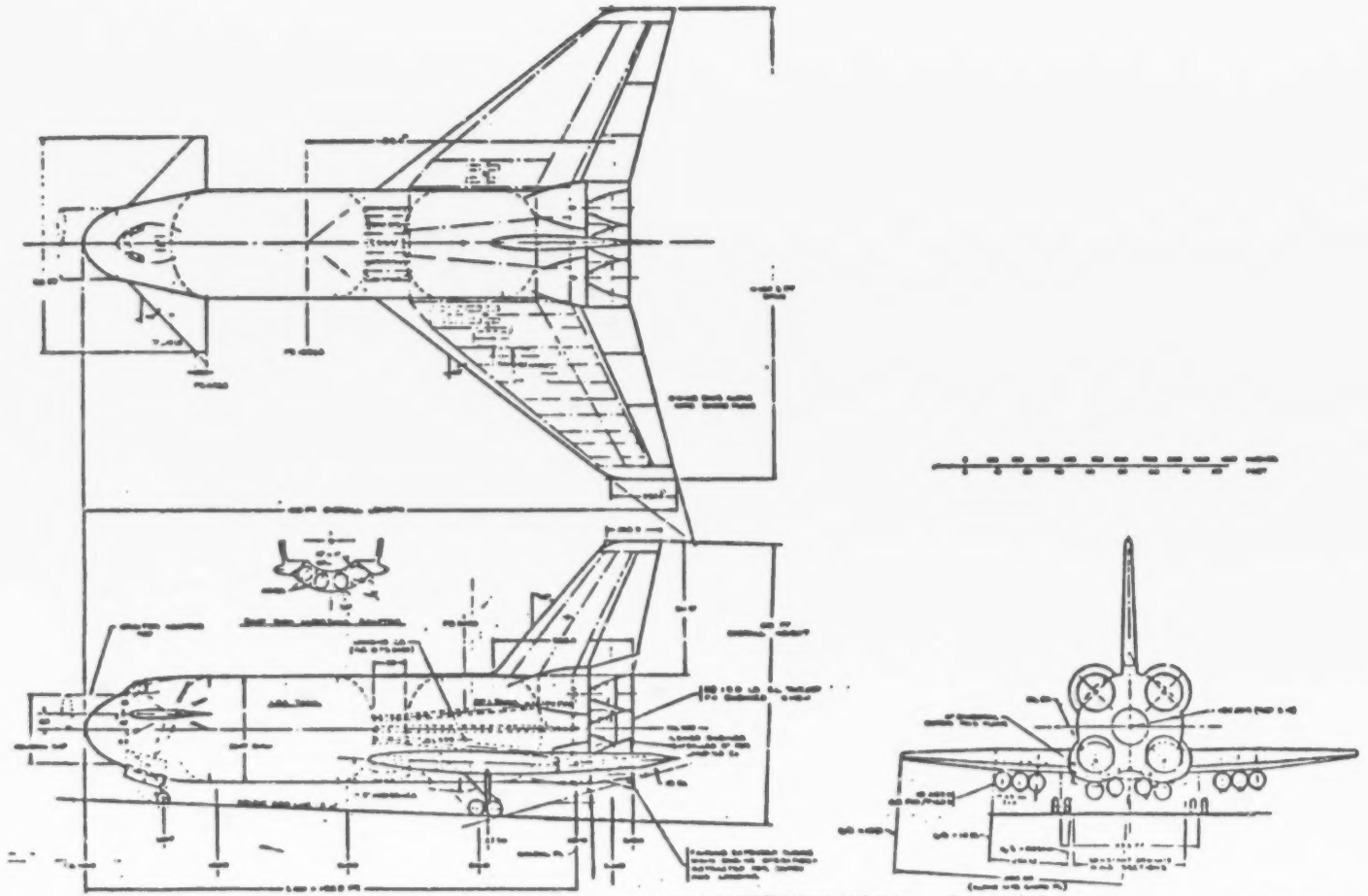

FIGURE 12. PREDESIGN OF THE B-1BE3 BOOSTER

DELTA WING BOOSTER
GD/C
DR#1223
A-1-21

DELTA WING BOOSTER
GD/C
DR#1237
A-1-22

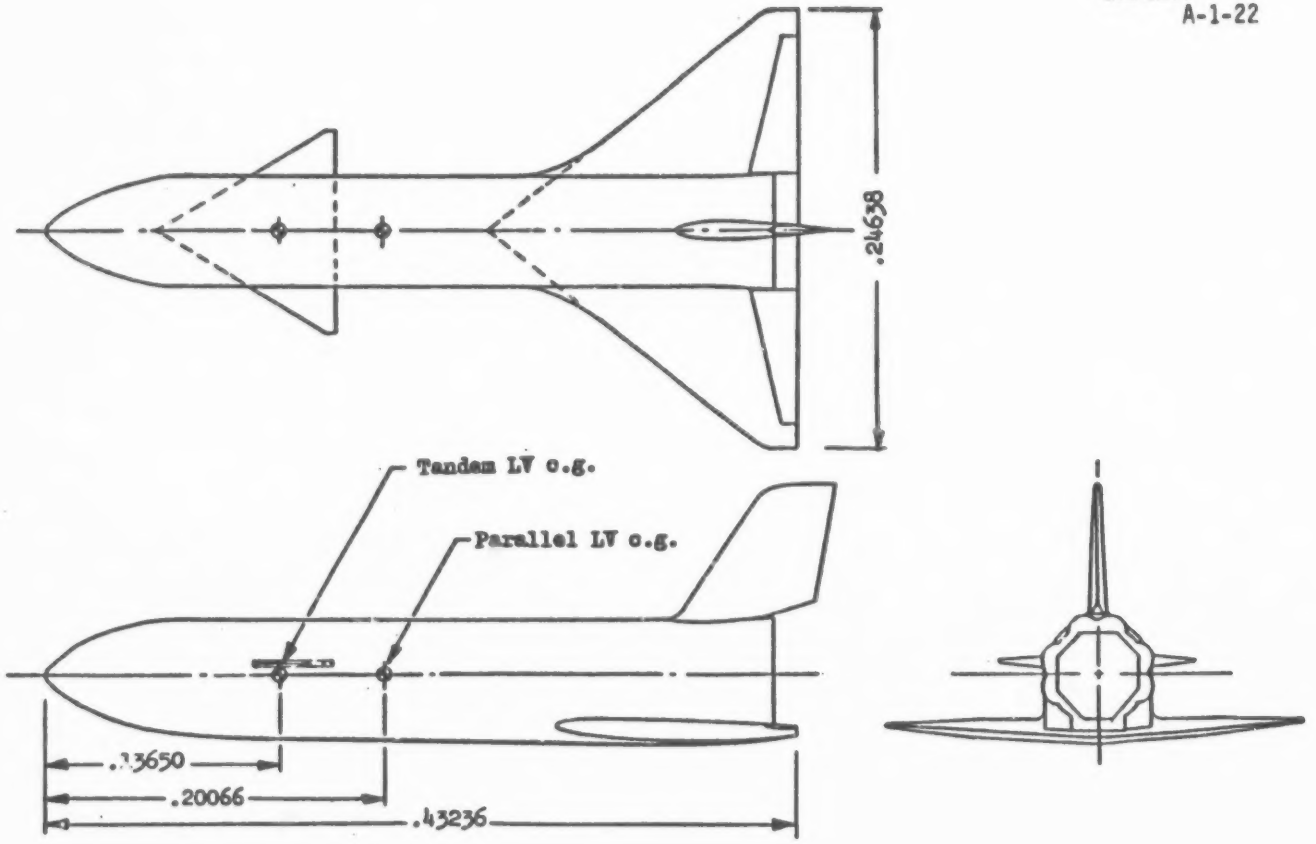

Figure 3.- General Dynamics B9U booster. All dimensions are given in meters.

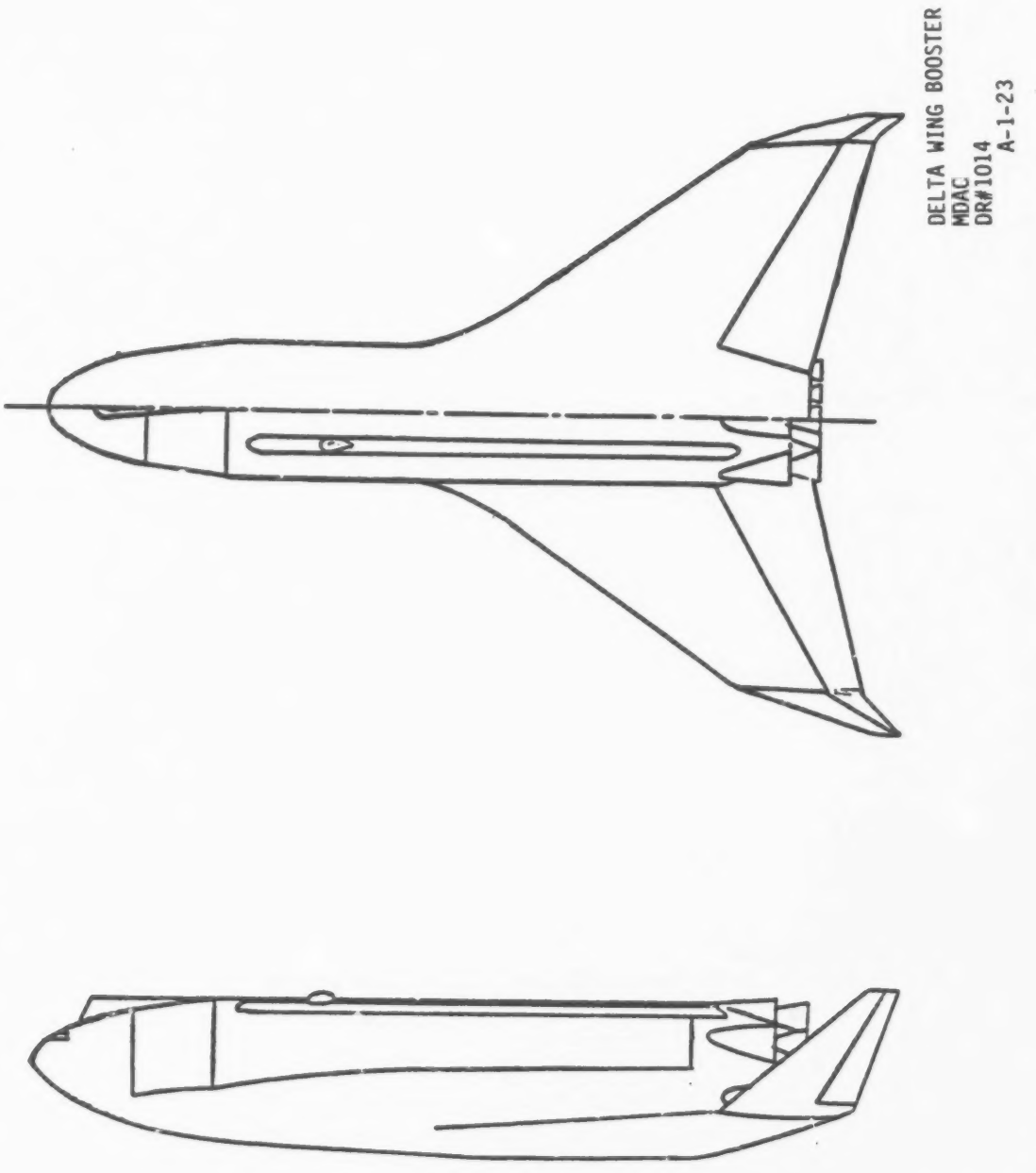

FIGURE 4. McDONNELL-DOUGLAS DELTA WING BOOSTER CONFIGURATION

DELTA WING BOOSTER
MMC
DR#1213
A-1-24

NOTE: 1. Dimensions are in inches.
2. Model values are shown in parenthesis.

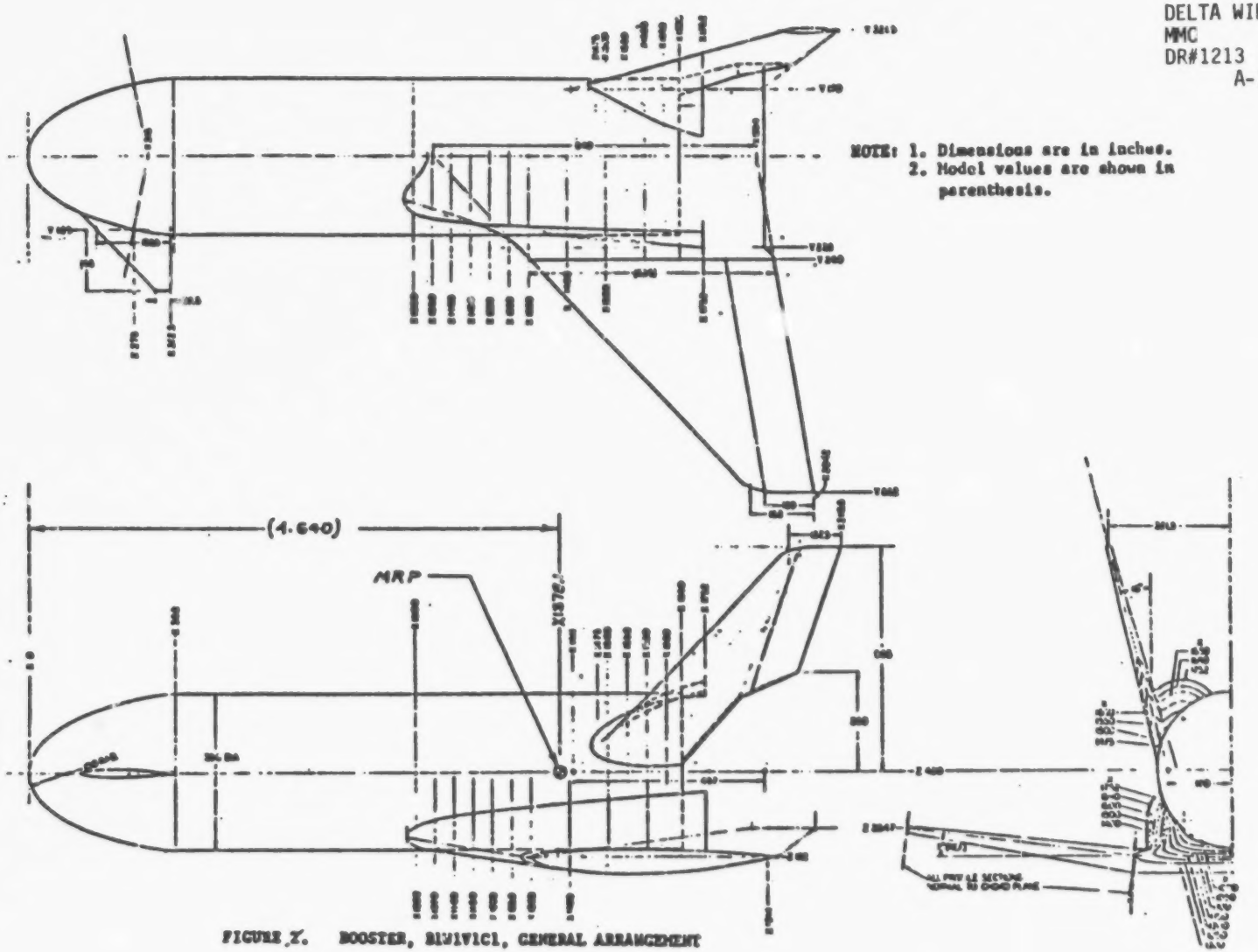

FIGURE 7. BOOSTER, BIVIVICL, GENERAL ARRANGEMENT

ORIGINAL PAGE IS
OF POOR QUALITY

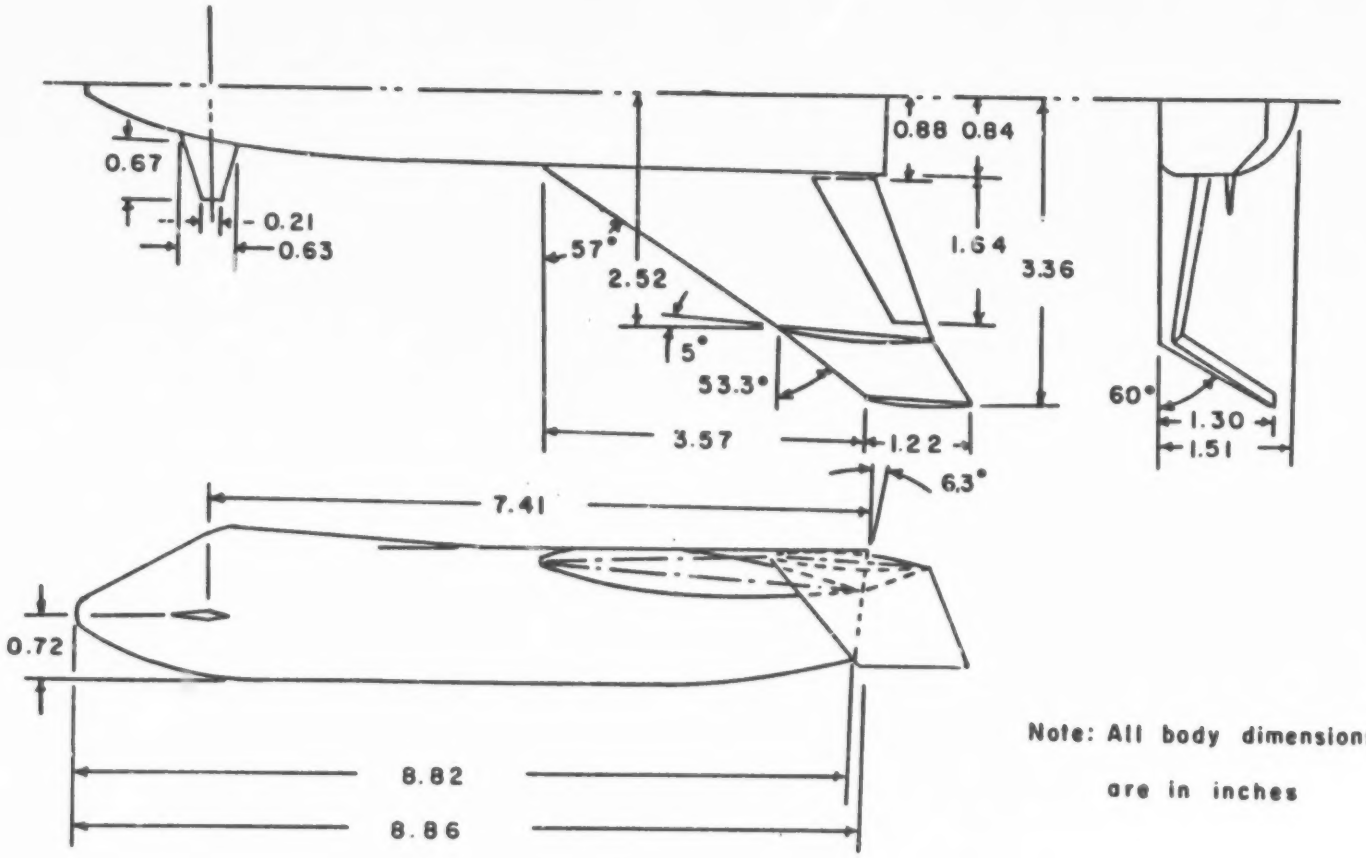

Note: All body dimensions are in inches

A 3-VIEW SKETCH OF THE MSFC 0.0035 SCALE BOOSTER MODEL

FIGURE 1

DELTA WING BOOSTER
MSFC
DR#1001
A-1-25

DELTA WING BOOSTER
TBC
DR#1209
A-1-2

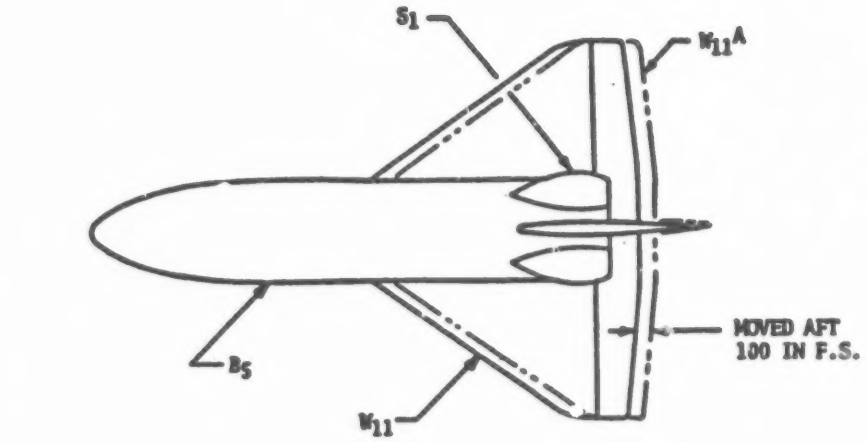

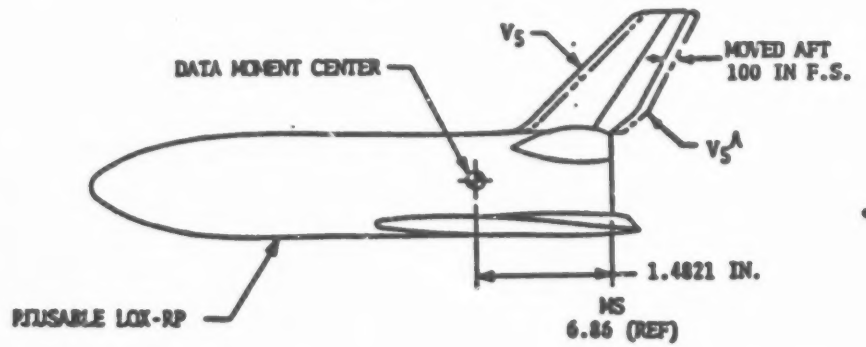

S = 14.6836 sq.in. (9000 sq.ft.) [W_{11}]
ℓ_{LONG} = 4.508 in.
ℓ_{LAT} = 5.655
AR = 2.18
λ = 0.15 i_w = +2°

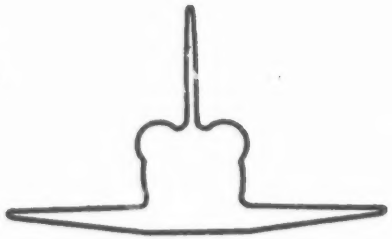

FIGURE 2. REUSABLE LOX-RP (-061) BOOSTER
0.003366 SCALE AR 12161-2 MODEL

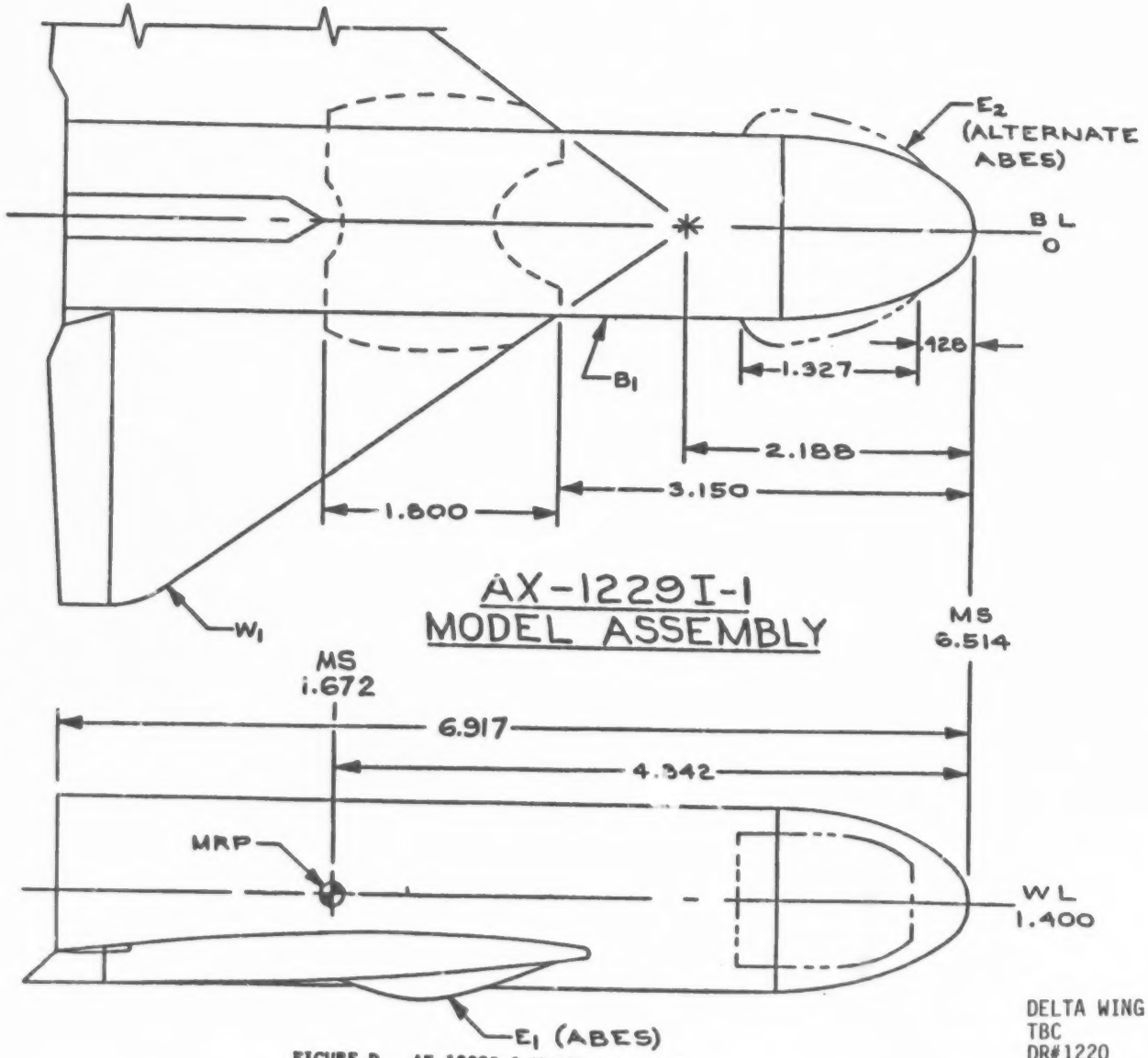

FIGURE D. AX-1229I-1 MODEL ASSEMBLY

DELTA WING BOOSTER
TBC
DR#1220
A-1-27

STRAIGHT WING BOOSTER
GD/C
DR#1029
A-1-28

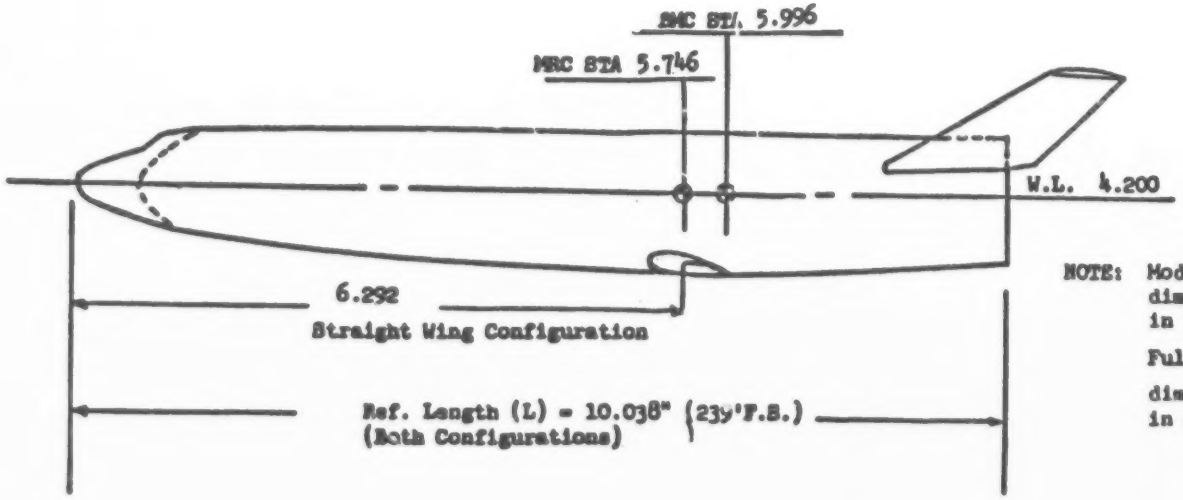

NOTE: Model scale dimensions are in inches.

Full scale dimensions are in feet.

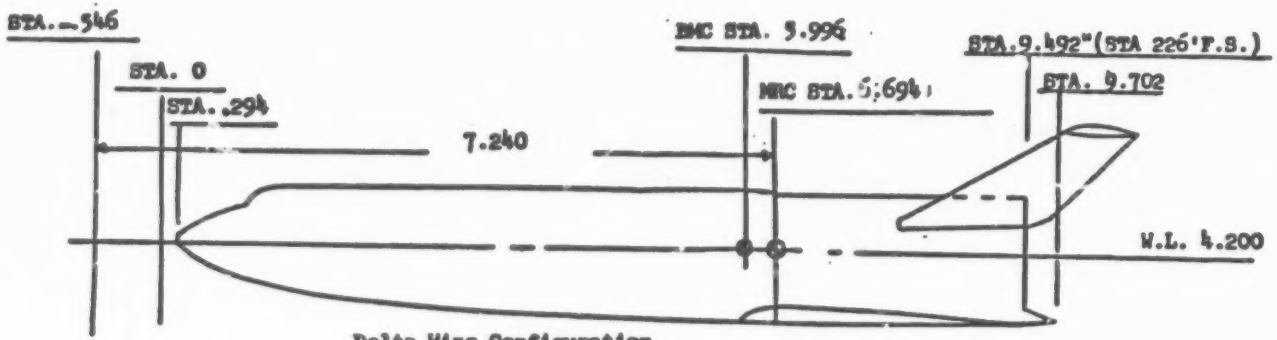

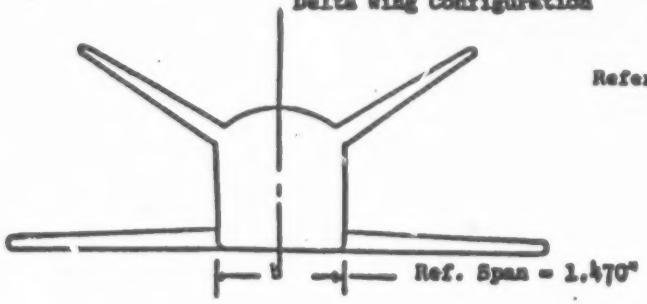

Reference Area (S) = 12.079 sq. in.

Figure 1.

Moment Transfer Diagram and Reference Lengths.

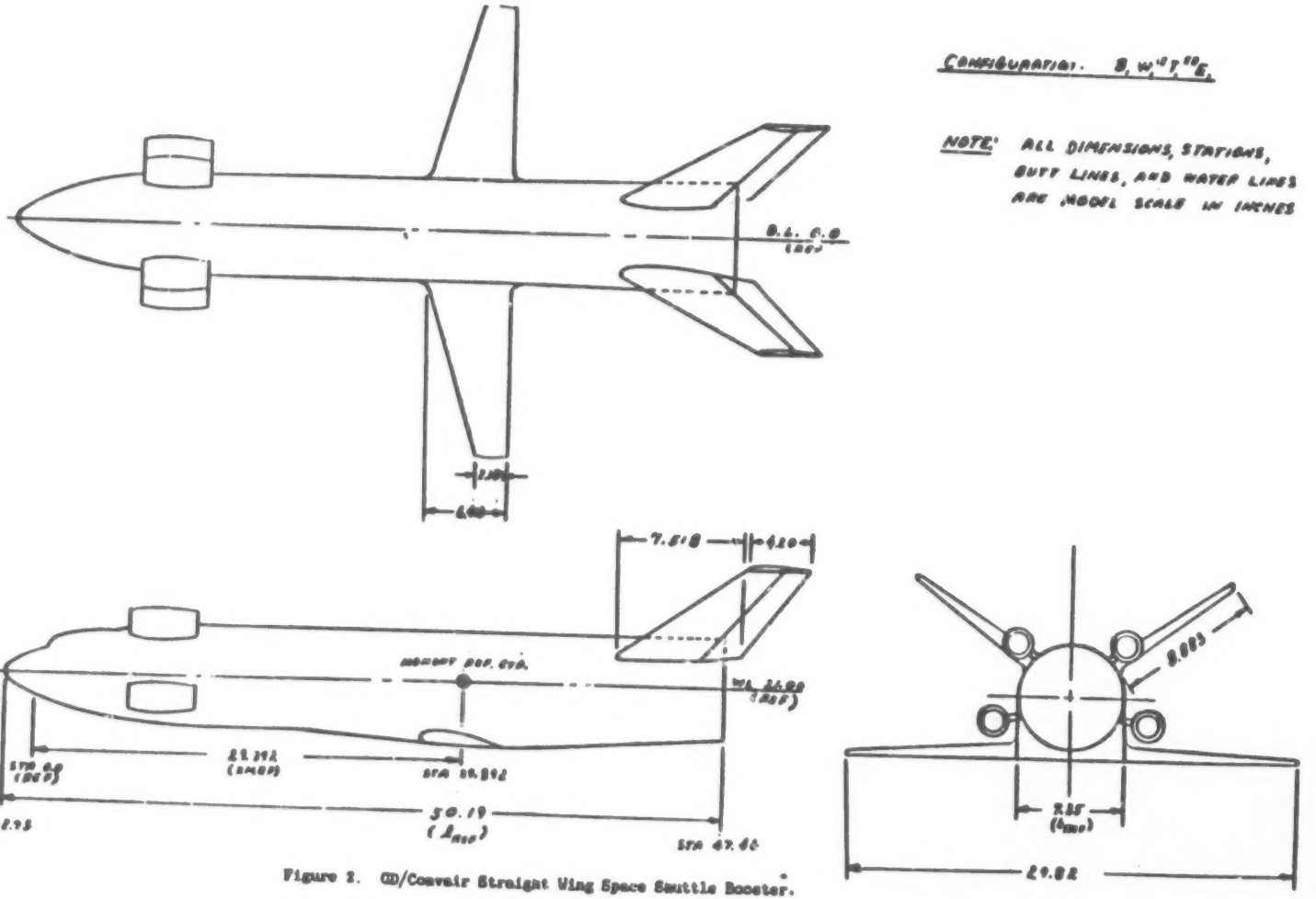

Figure 2. GD/Convair Straight Wing Space Shuttle Booster.

STRAIGHT WING BOOSTER
GD/C
DR#1030
A-1-29

ORIGINAL PAGE IS
OF POOR QUALITY

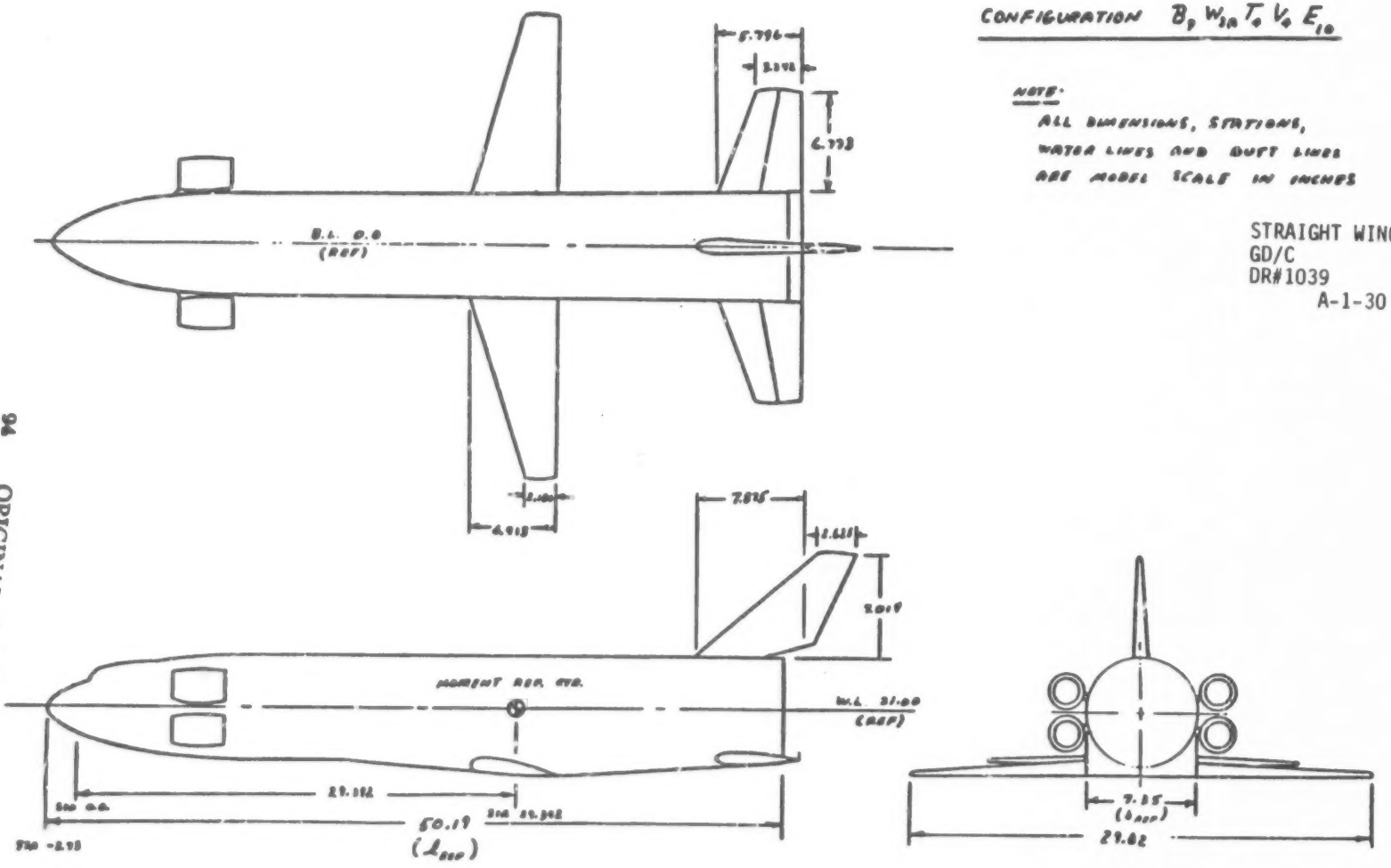

Figure 2. GD/Convair Straight Wing Space Shuttle Booster.

ORIGINAL PAGE IS
OF POOR QUALITY

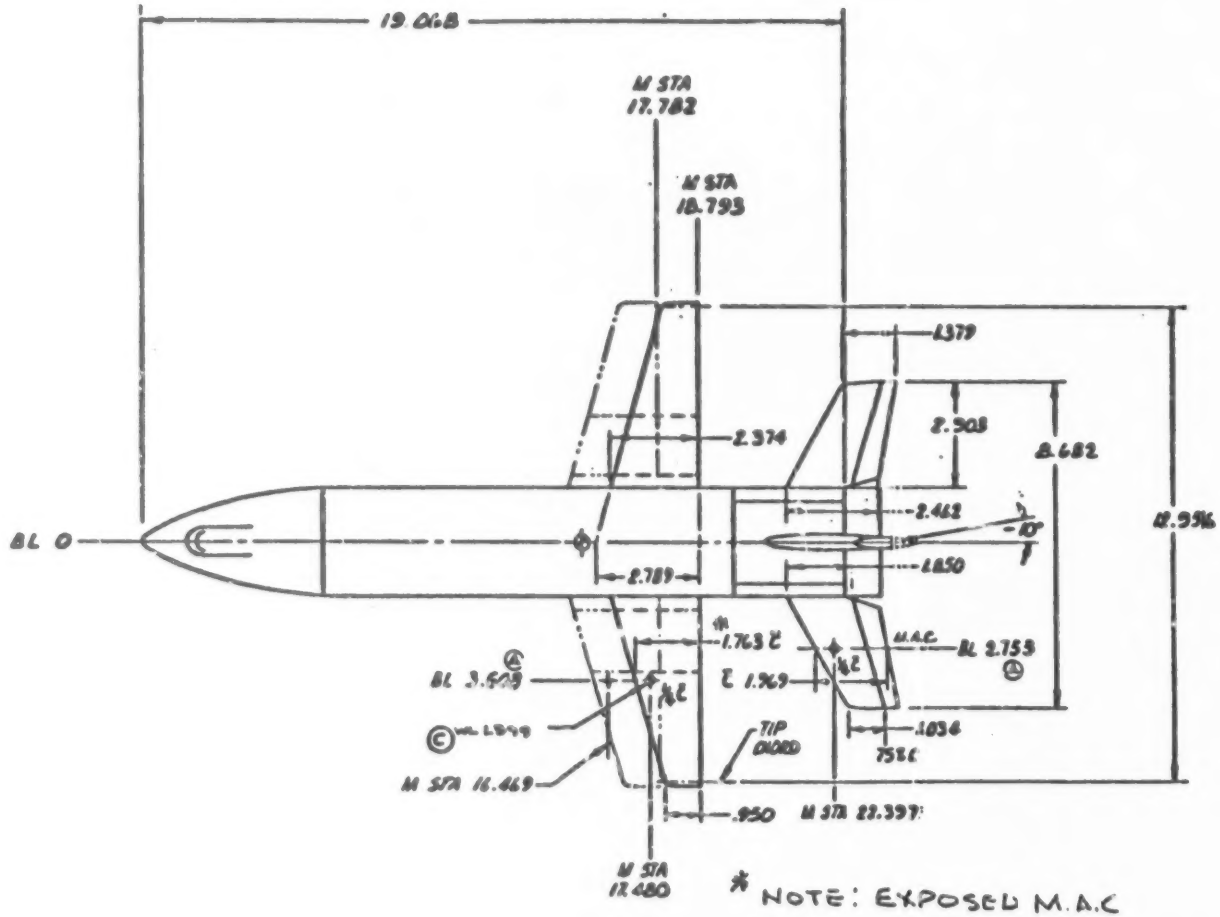

Figure 5. The 0.0076 Scale B-8H-1 Booster Model, Top view.

STRAIGHT WING BOOSTER
GD/C
DR#1100-1
A-1-31

ORIGINAL PAGE IS
OF POOR QUALITY

ORIGINAL PAGE IS
OE POOR QUALITY.

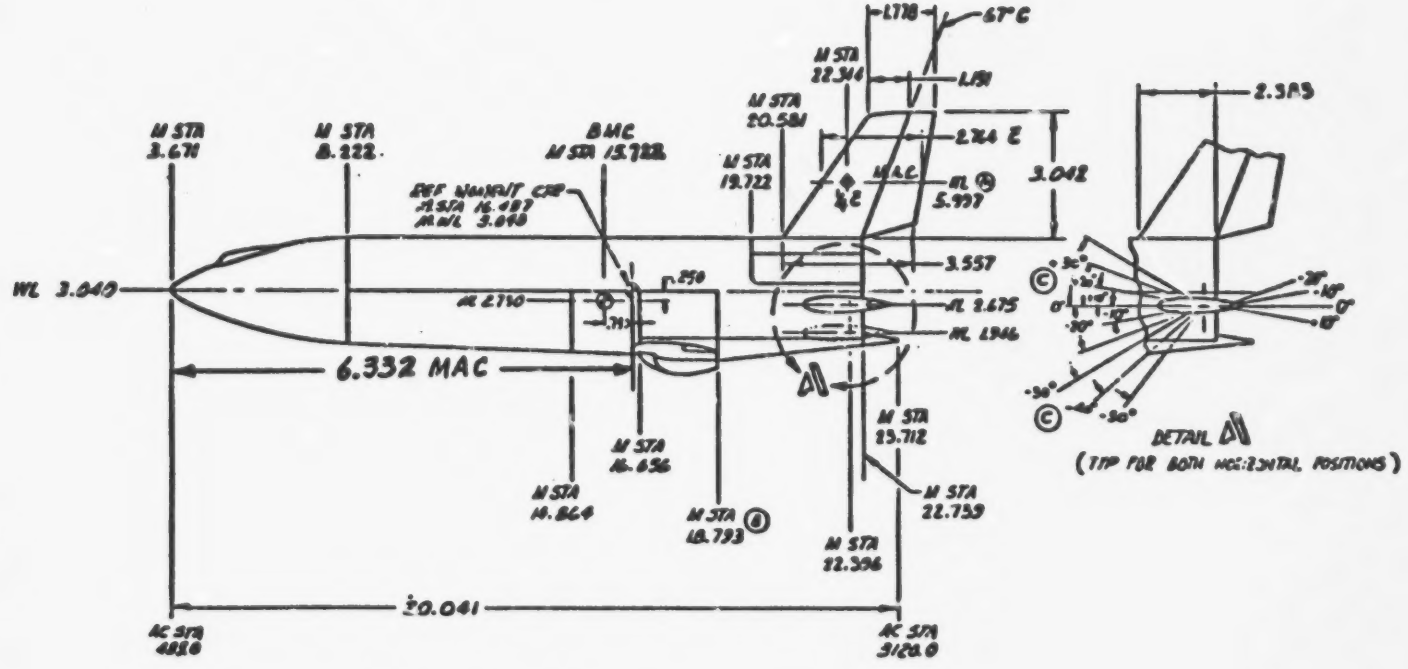

Figure 6. The 0.0076 B-8H-1 Booster Model, Sideview.

Attitude	Normal (lbs)	Pitching(in.lb)	Axial (lbs)
$\alpha = 90°$	380		
$\alpha = 90°$		890	
$\alpha = 0°$ $\beta = -30°$			25

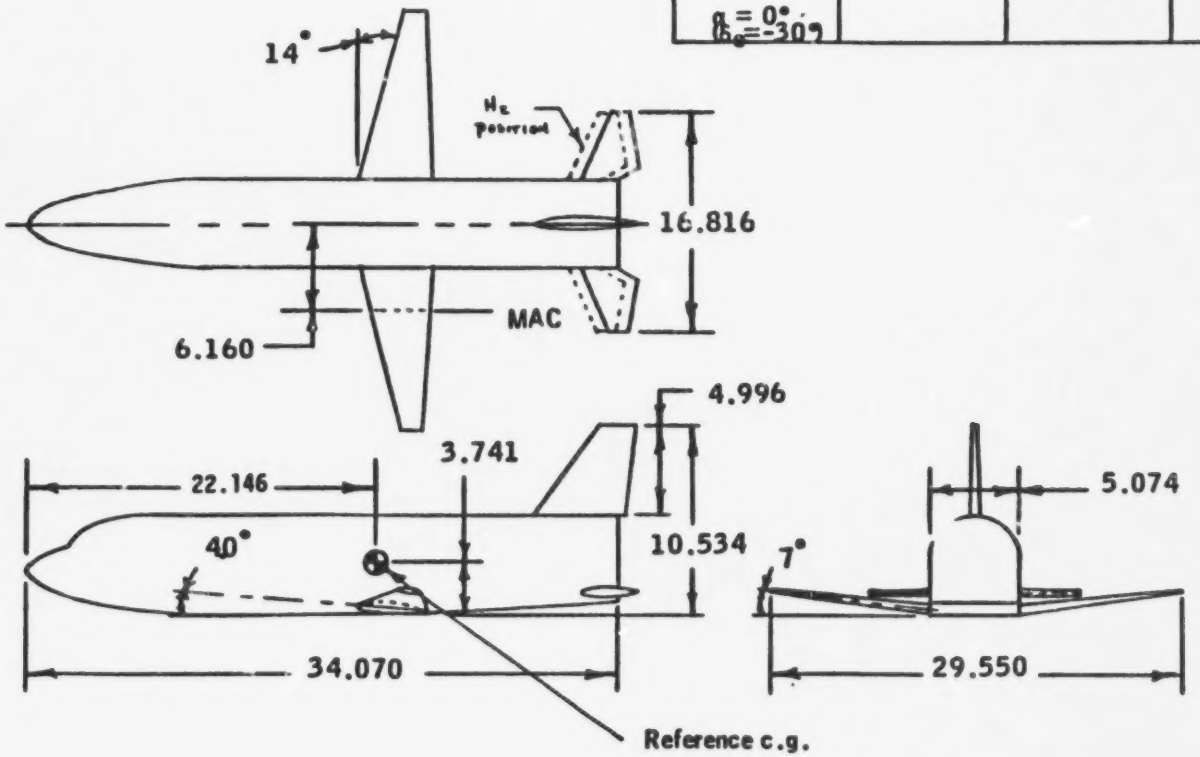

Figure 1.- Assembled model geometry and maximum loads. Configuration $B_{B_1}W_{B_1}V_{B_1}H_{B_1}$ (All dimensions in inches model values).

STRAIGHT WING BOOSTER
MSC
DR#1033
A-1-33

STRAIGHT WING BOOSTER
TBC
DR#1079
A-1-34

AX 1193E-2
ASSEMBLY

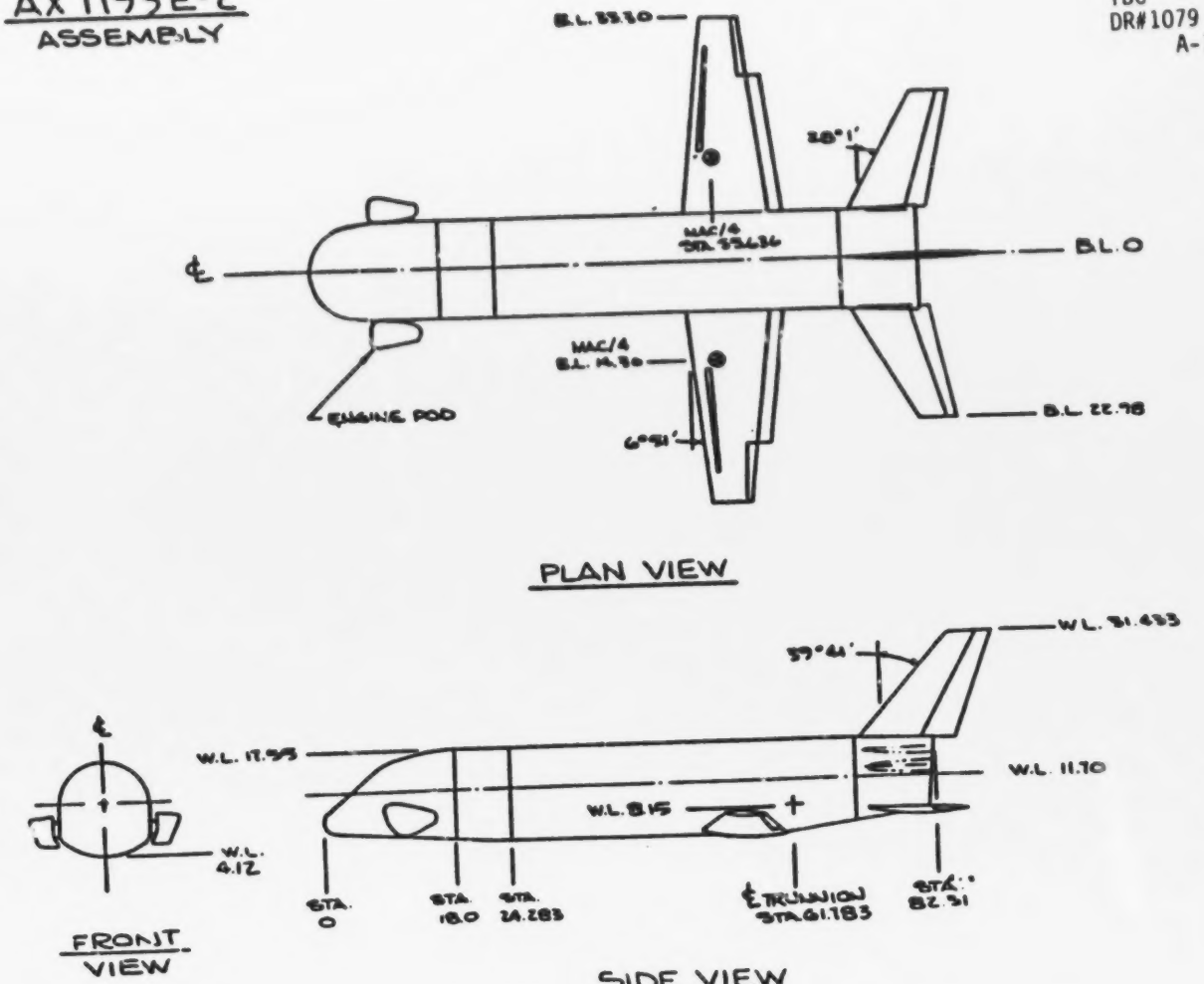

FIGURE 2. AX 1193E-2 ASSEMBLY

AX-1202I-2

MODEL ASSEMBLY
DRAWING 25-56543

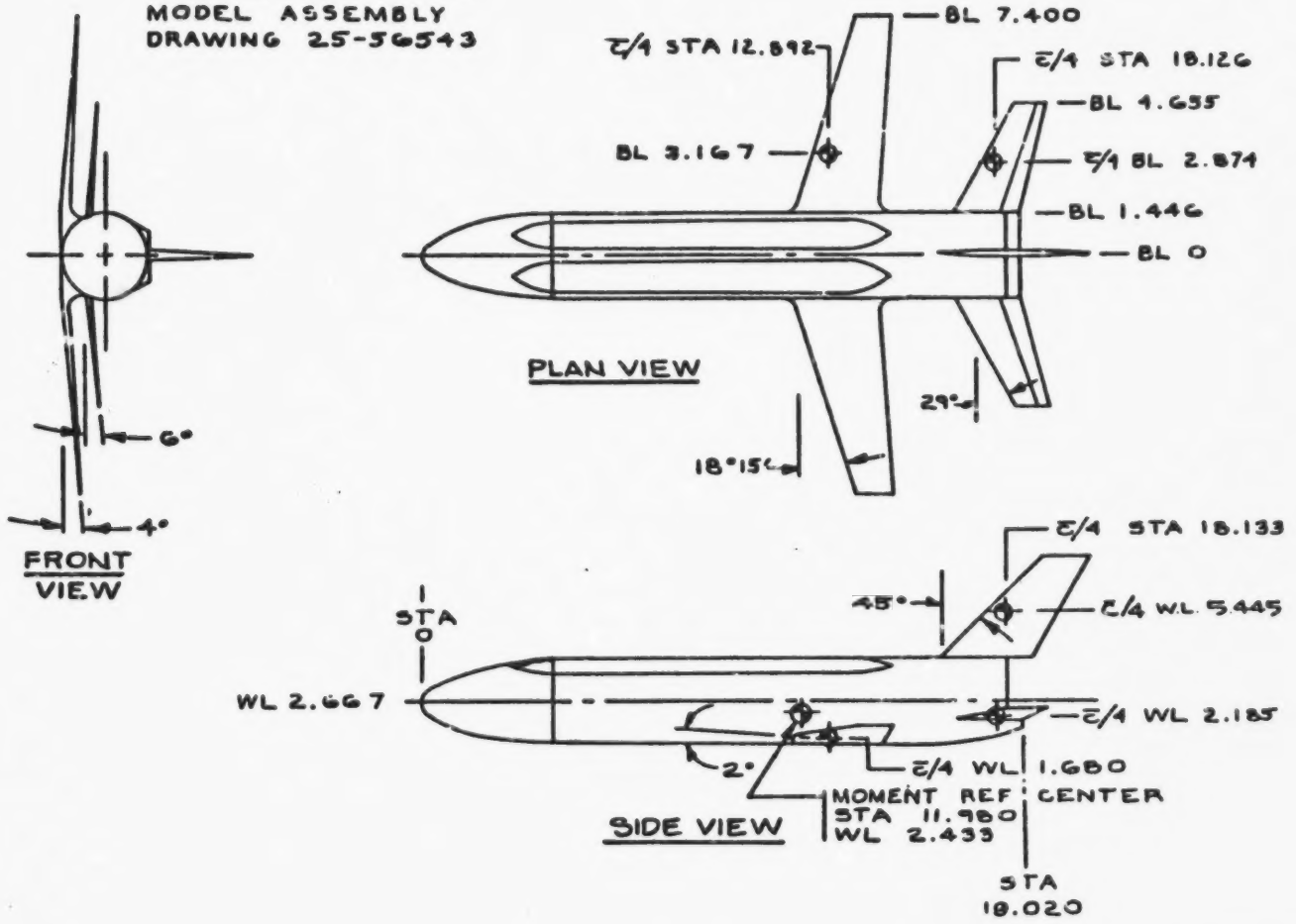

ORIGINAL PAGE IS
OF POOR QUALITY

Figure 2.

STRAIGHT WING BOOSTER
TBC
DR#1191
A-1-35

UNIQUE CONFIG. BOOSTER
CCSD
DR#1089-1
A-1-36

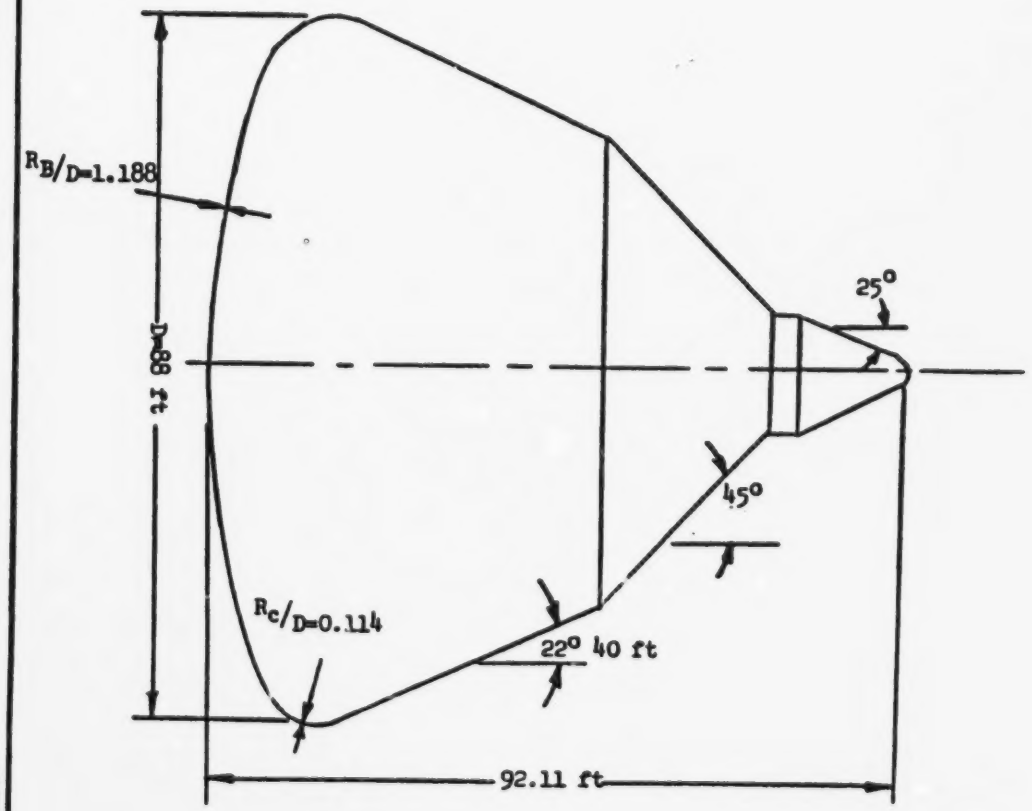

FIGURE 2. SERV REVISED BASELINE ASCENT VEHICLE WITH RETRACTED PERSONNEL MODULE PAYLOAD

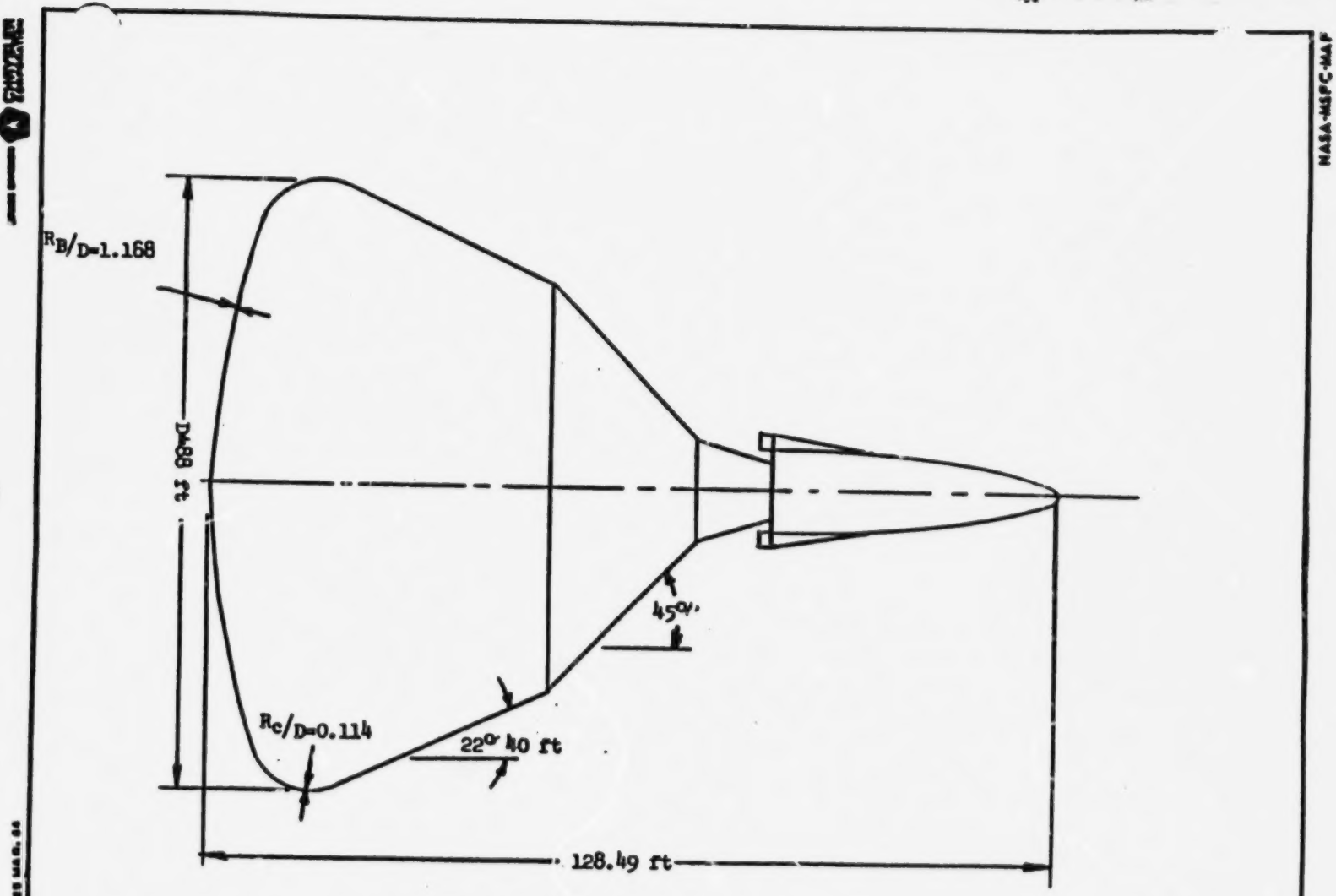

FUGURE 3. SERV REVISED BASELINE ASCENT VEHICLE WITH WINGED ORBITER PAYLOAD

UNIQUE CONFIG. BOOSTER
CCSD
DR# 1089-2
A-1-37

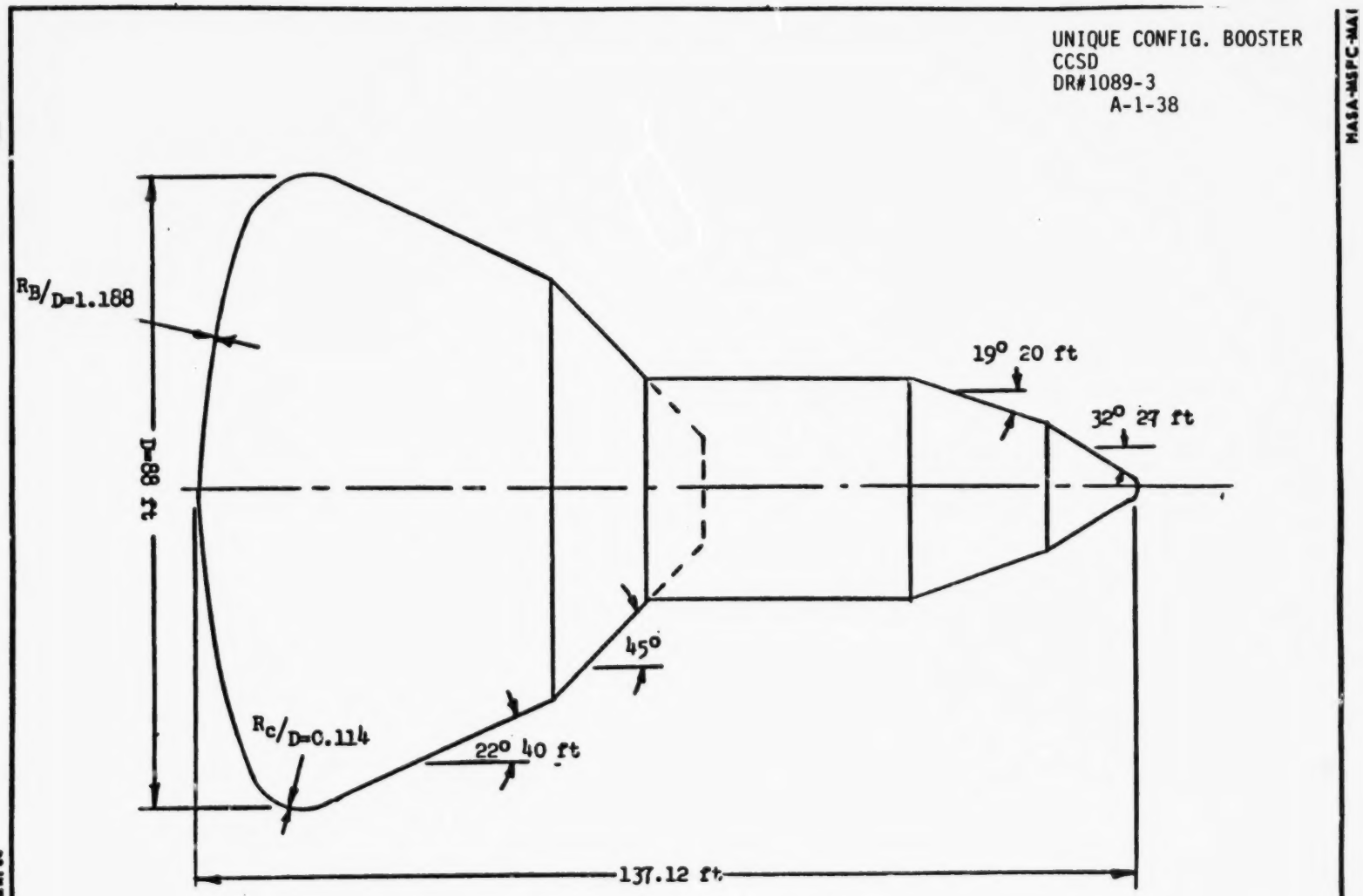

FIGURE 4. SERV REVISED BASELINE ASCENT VEHICLE
WITH LARGE CARGO MODULE PAYLOAD

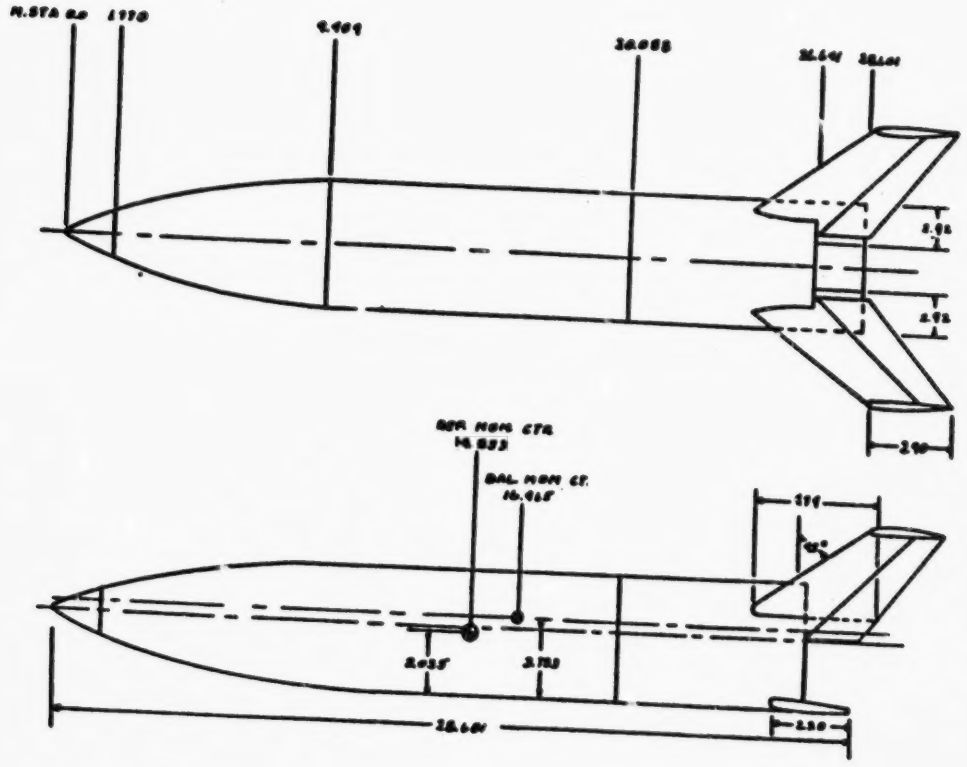

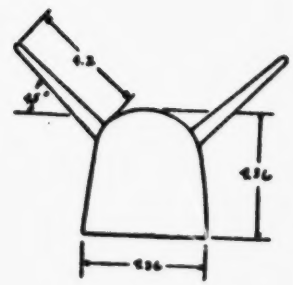

Figure 2. 3-View Sketch of a 0.0182 Scale Model of the GD/Convair (T-18) Booster.

UNIQUE CONFIG. BOOSTER
GD/C
DR#1006
A-1-39

UNIQUE CONFIG. BOOSTER
LARC
DR#1019-1
A-1-40

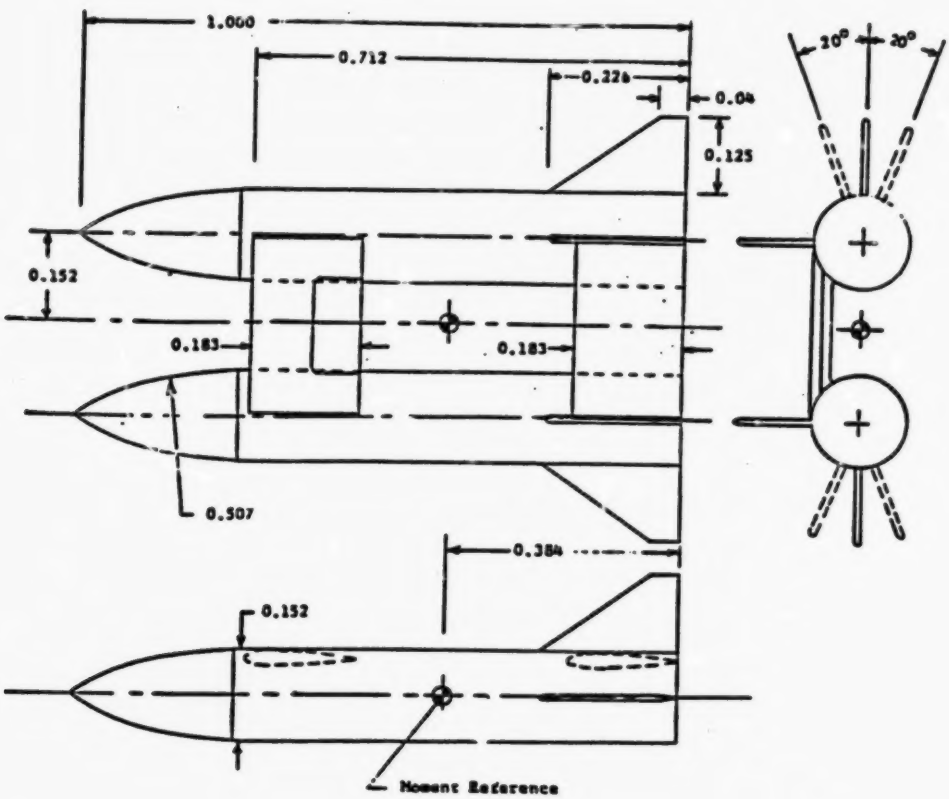

(a) Model with wing 1

Figure 2 | Sketch of model used in investigation. All dimensions are normalized with respect to body length. Body length = 20.8 inches (52.8 cm).

UNIQUE CONFIG. BOOSTER
LARC
DR#1019-2
A-1-41

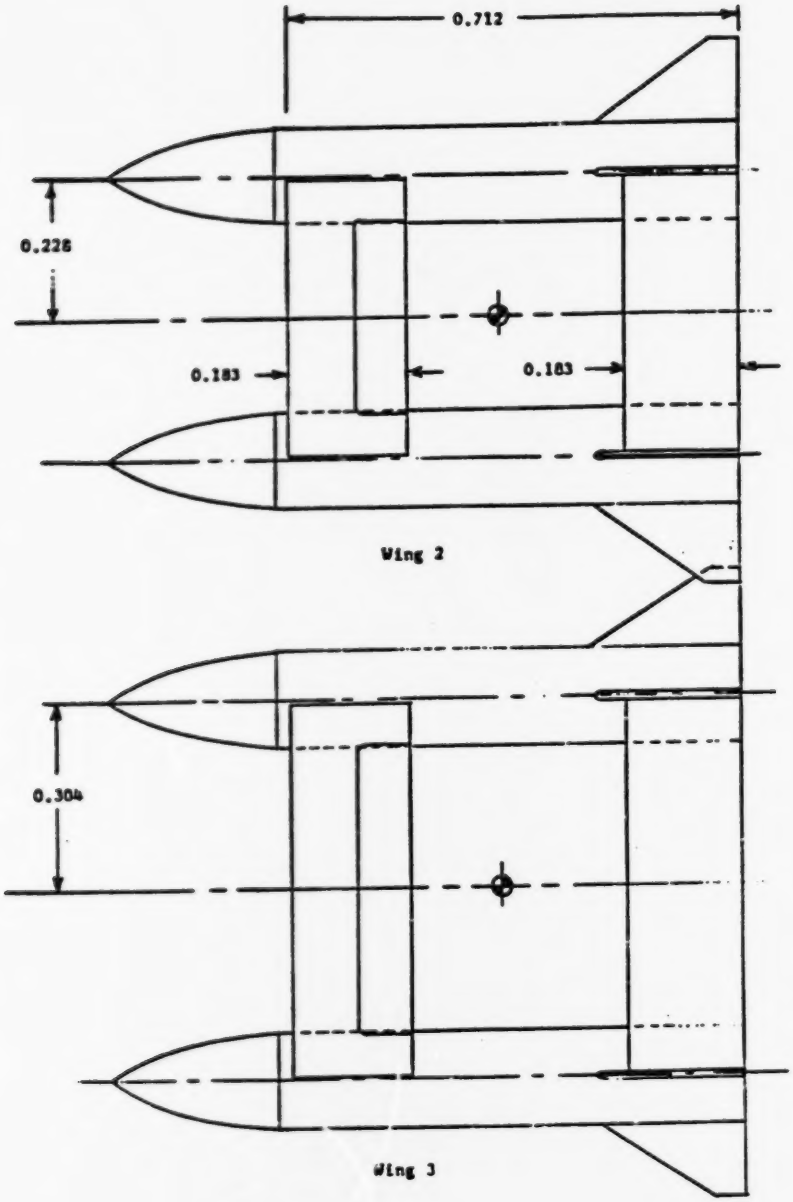

(b) Model with wings 2 and 3.

Figure 2 - Continued.

UNIQUE CONFIG. BOOSTER
LARC
DR#1019-3
A-1-42

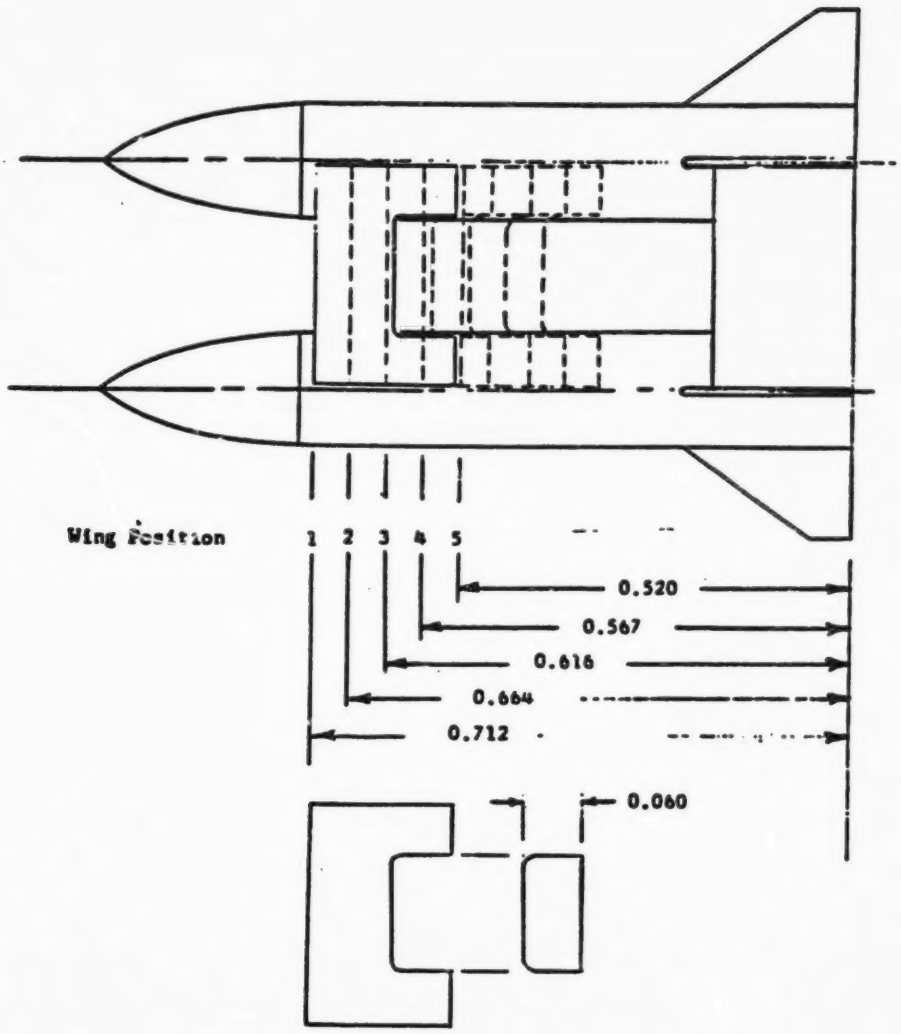

Forward Wing Insert Detail

(c) Forward wing positions

Figure 2 - Concluded.

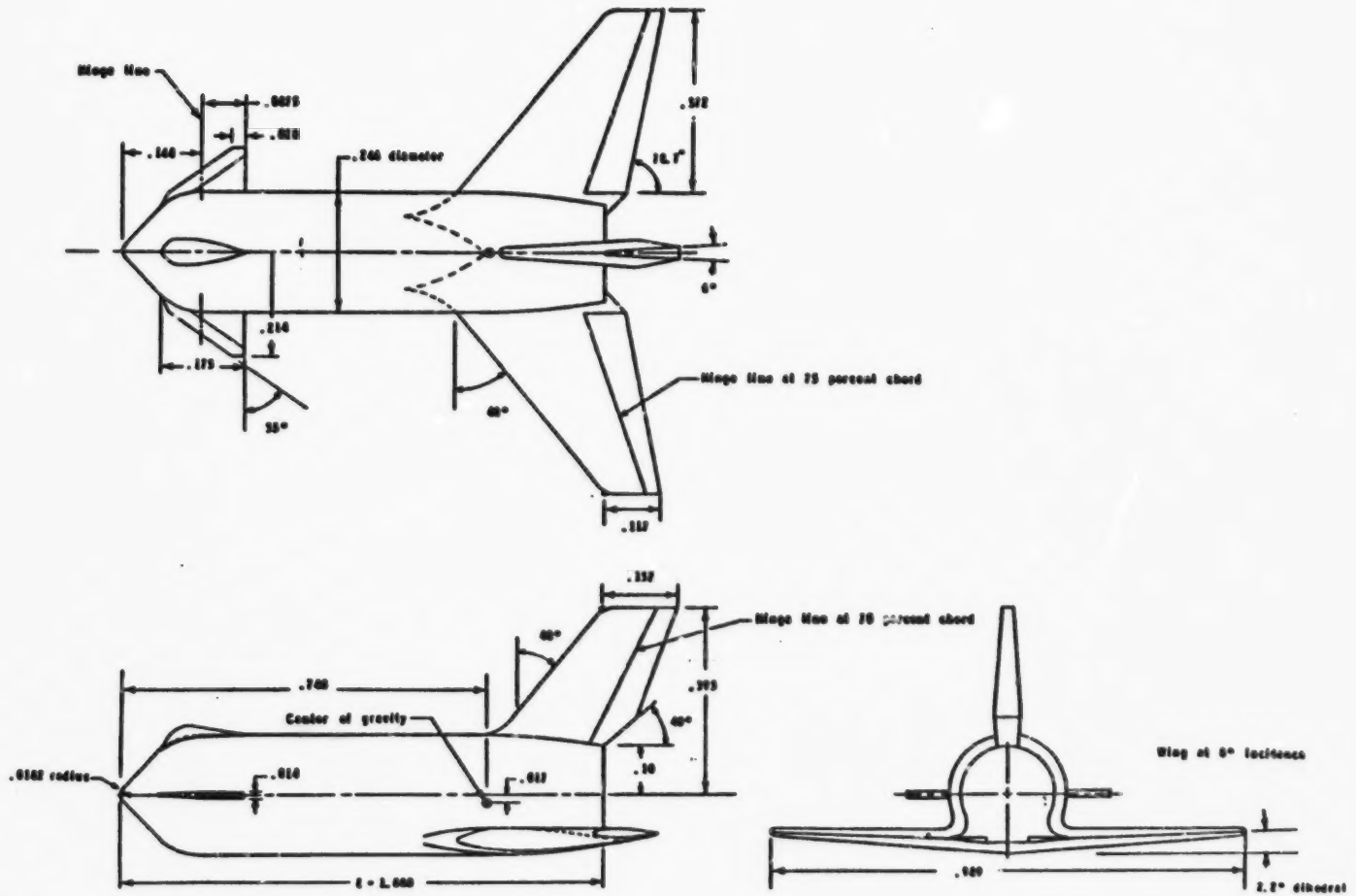

Figure 2. Booster model. All dimensions in percent of fuselage length (8.90-inch)

UNIQUE CONFIG. BOOSTER
LARC
DR#1198
A-1-43

APPENDIX A-2

MODEL FIGURES

ORBITER AERODYNAMICS

PRECEDING PAGE BLANK NOT FILMED

ORIGINAL PAGE IS
OF POOR QUALITY

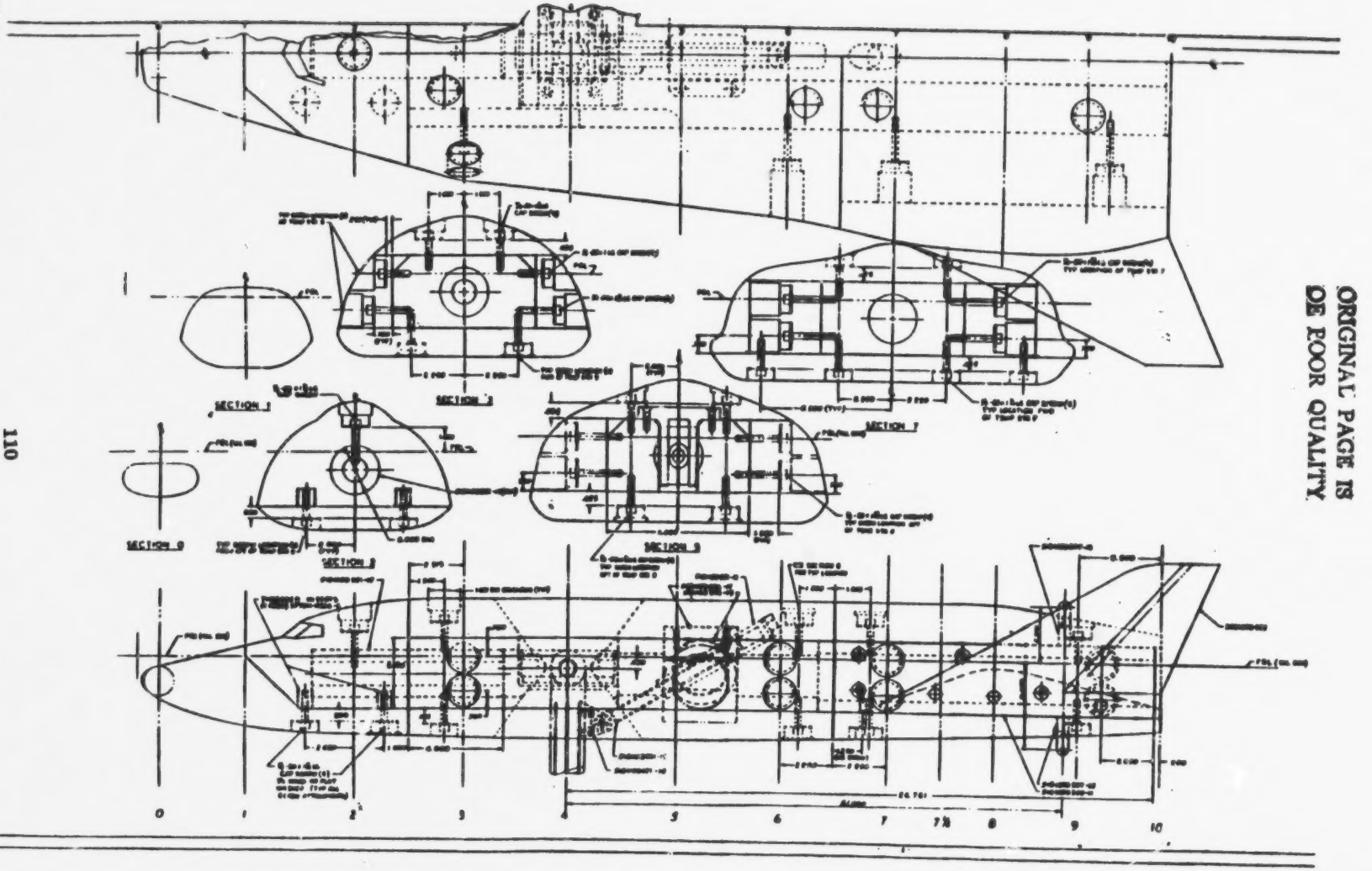

DELTA BODY ORBITER
GAC
DR#1005-1
A-2-1

FIGURE 1. GENERAL ARRANGEMENT DRAWING OF 1/40 SCALE EARTH ORBITER-III A 518 MOD 320

DELTA BODY ORBITER
GAC
DR#1005-2
A-2-2

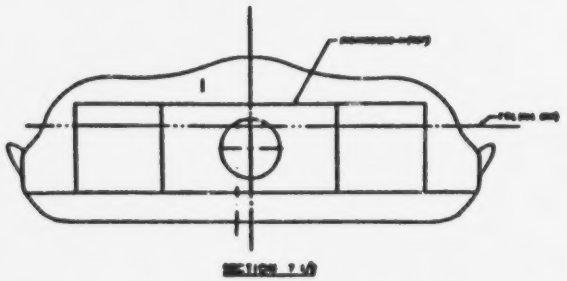

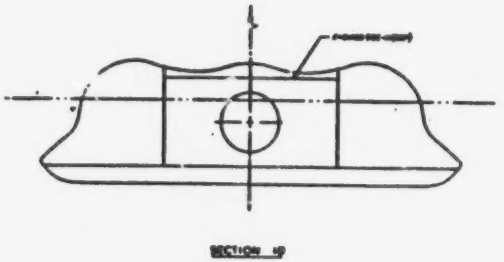

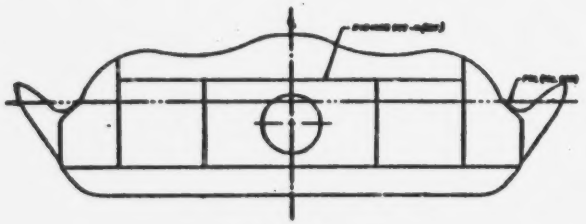

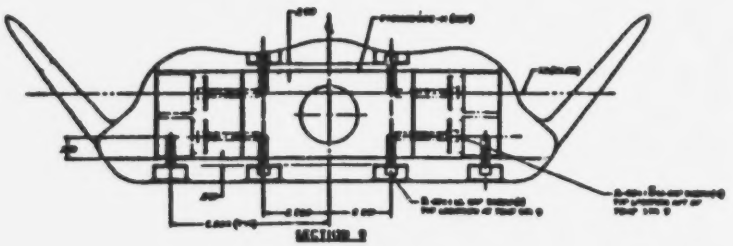

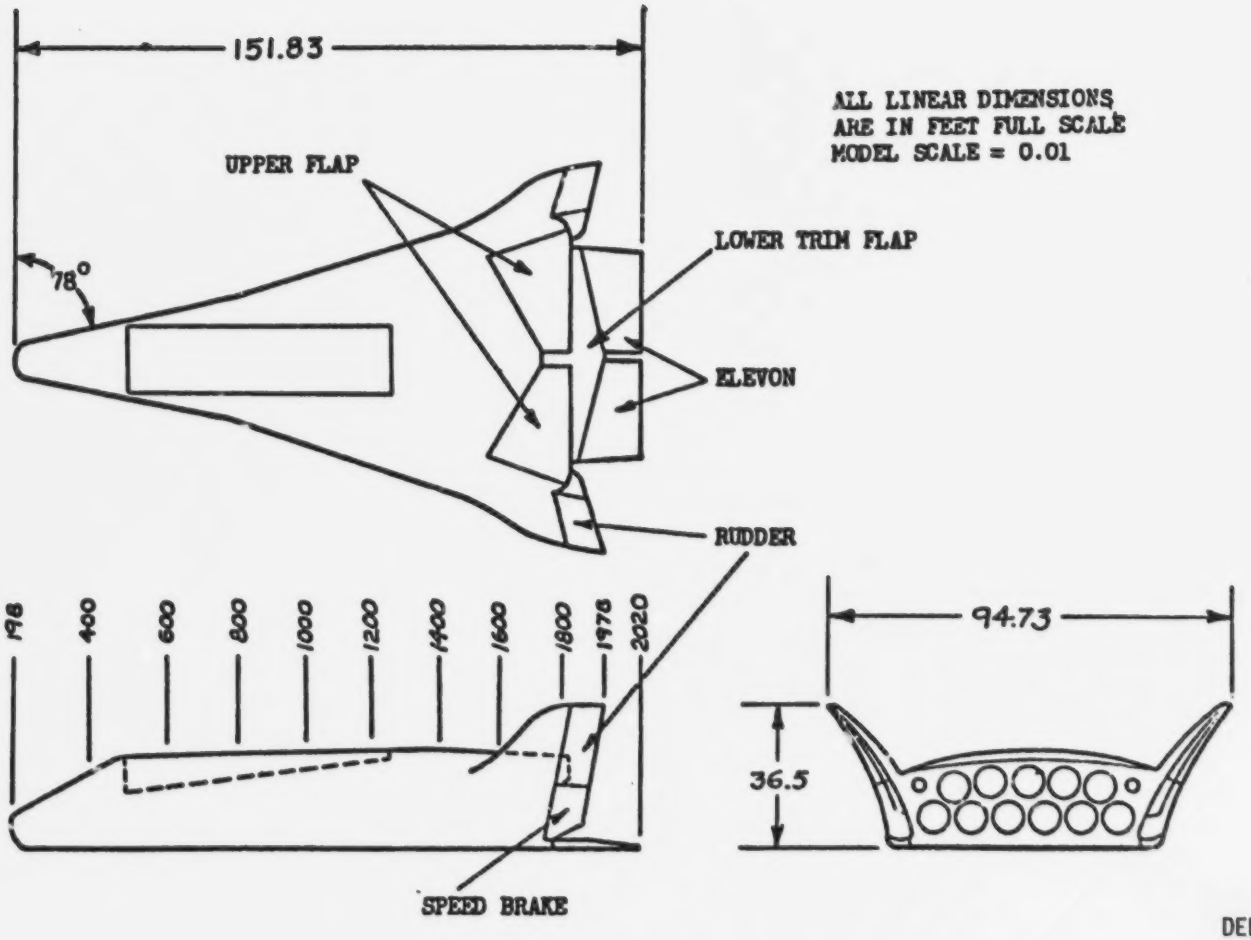

FIGURE 1. ORBITER CONFIGURATION $B_4F_{16}E_2$ THREE-VIEW

DELTA BODY ORBITER
LMSC
DR# 57
A-2-3

DELTA BODY ORBITER
LMSC
DR#1169
A-2-4

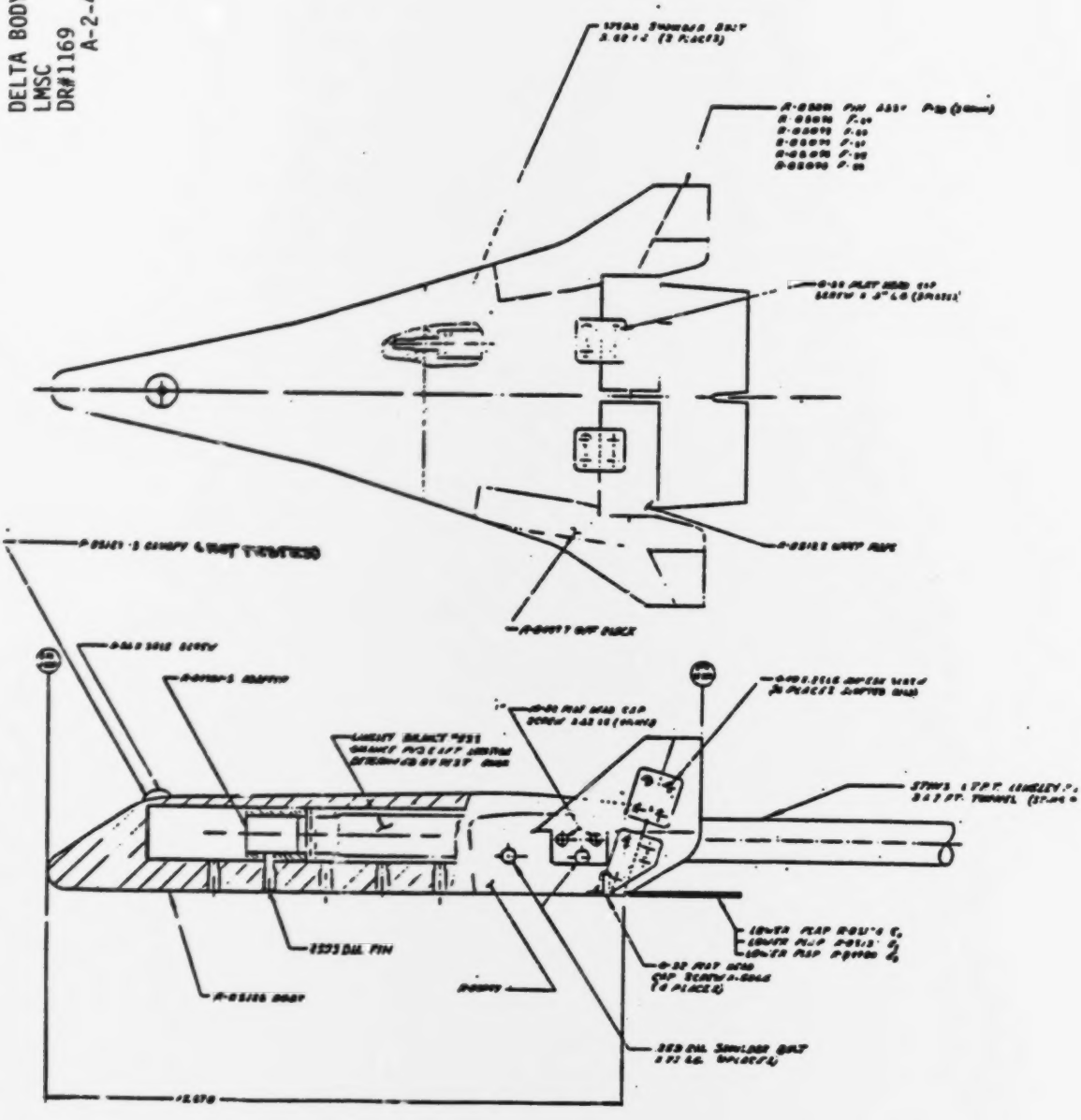

FIG. 2b Body B_{10}

ORIGINAL PAGE IS
OF POOR QUALITY

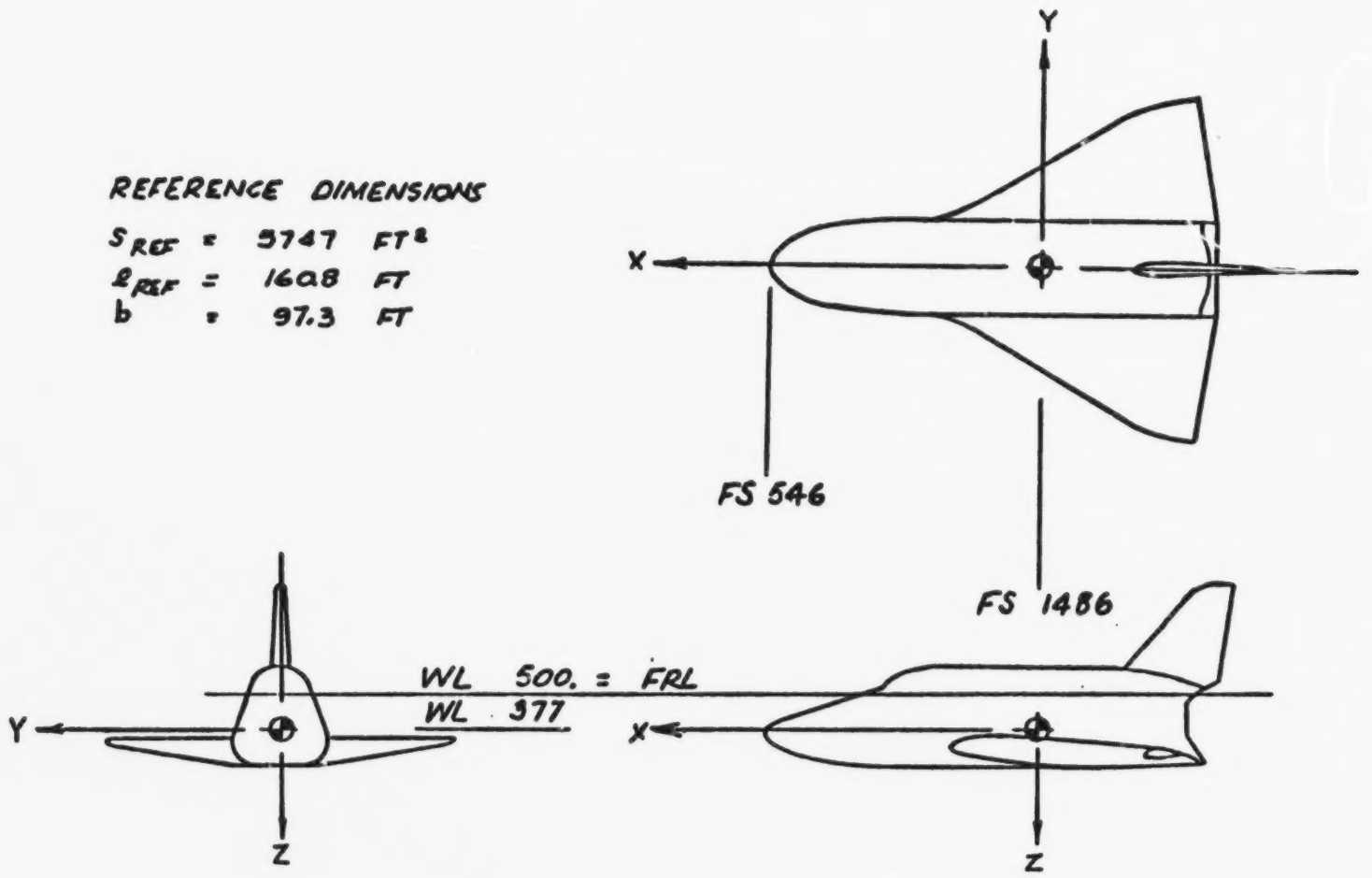

FIGURE 6. GENERAL ARRANGEMENT, ROS-NB2

DELTA WING ORBITER
GAC
DR#1142-1
A-2-5

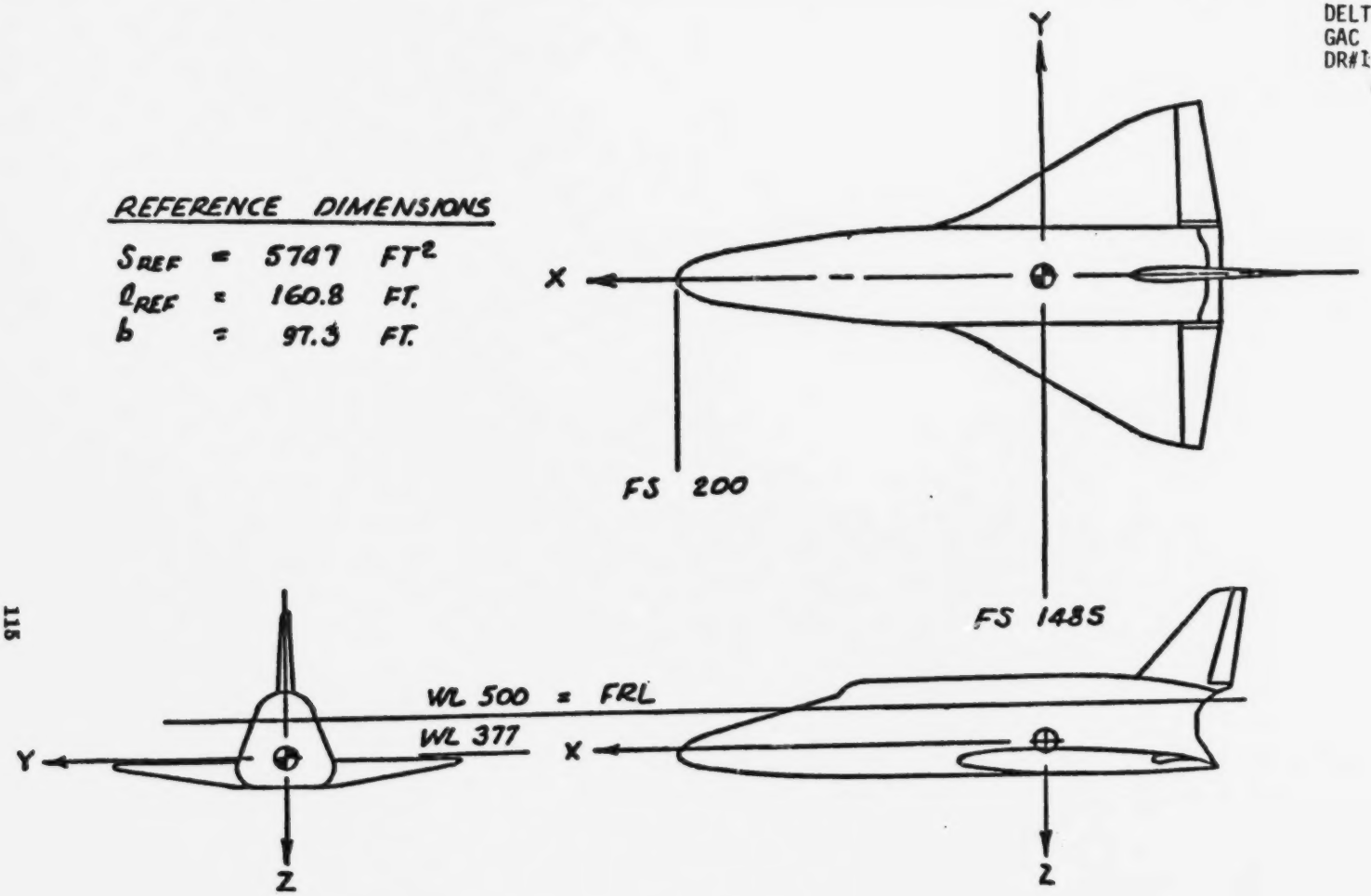

FIGURE 5. GENERAL ARRANGEMENT, ROS-NB1

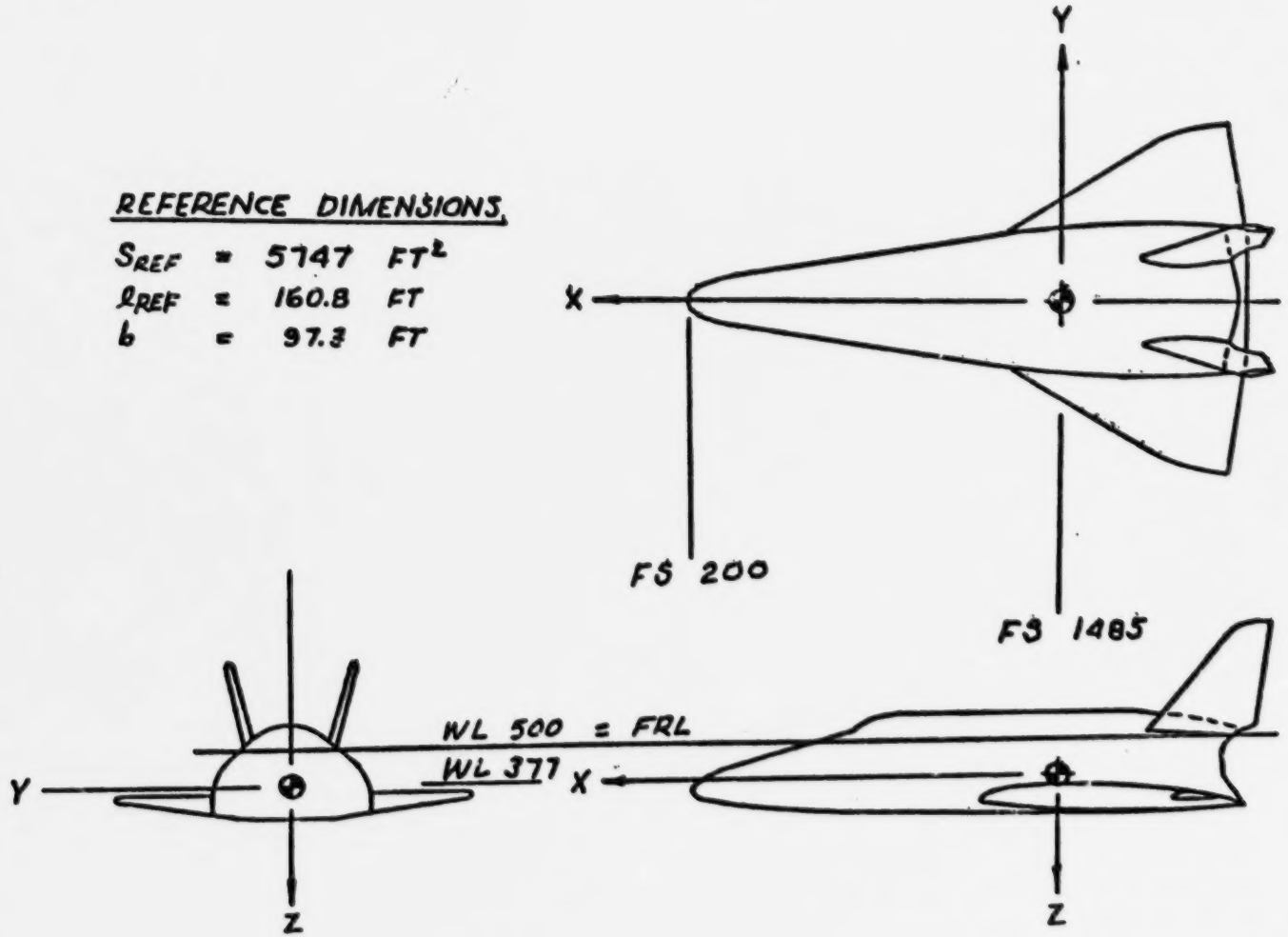

DELTA WING ORBITER
GAC
DR#1159
A-2-7

FIGURE 5. GENERAL ARRANGEMENT - ROS- WB1

DELTA WING ORBITER
GAC
DR#1211
A-2-8

H-33 ORBITER
WITHOUT EXTERNAL TANKS

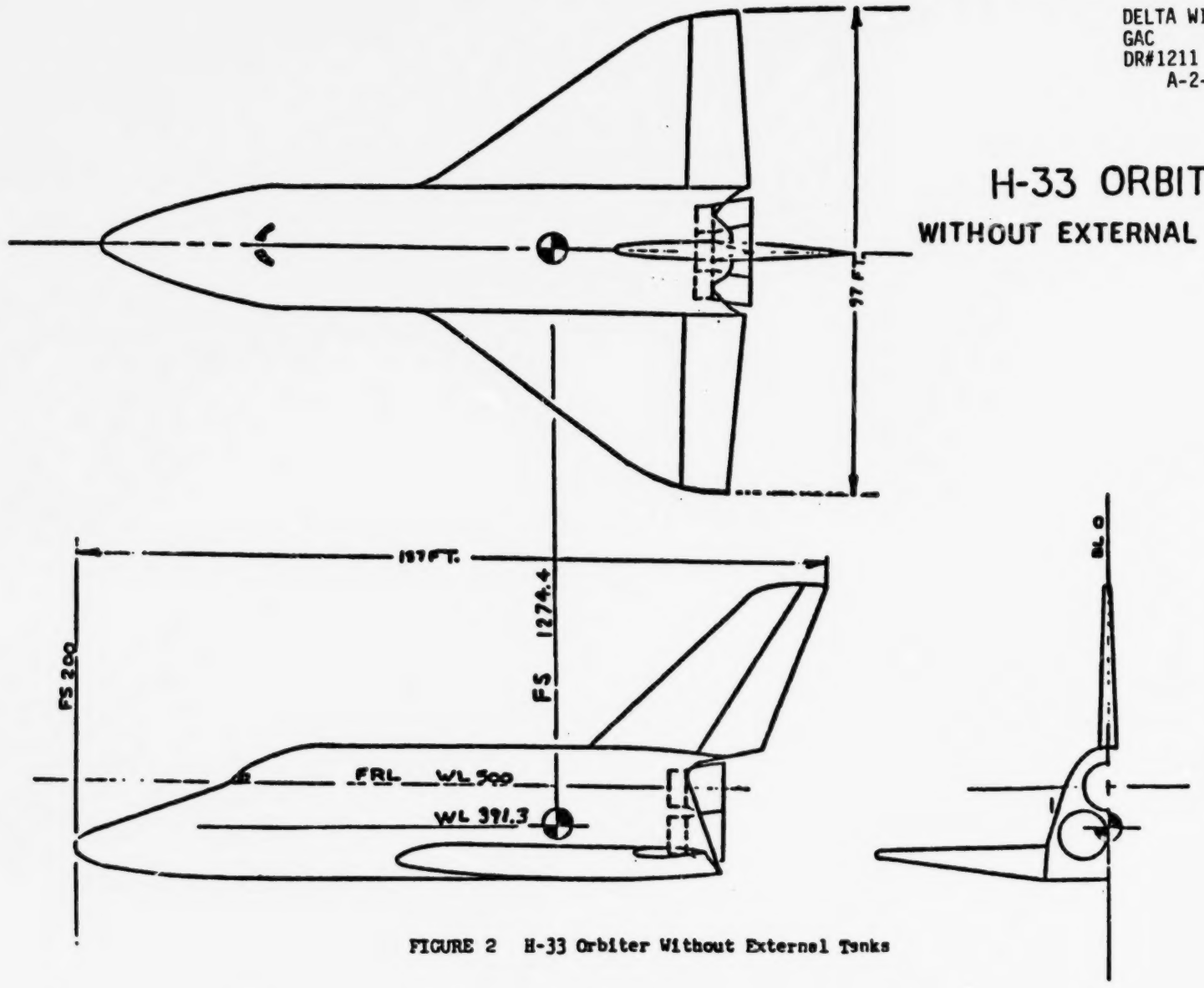

FIGURE 2 H-33 Orbiter Without External Tanks

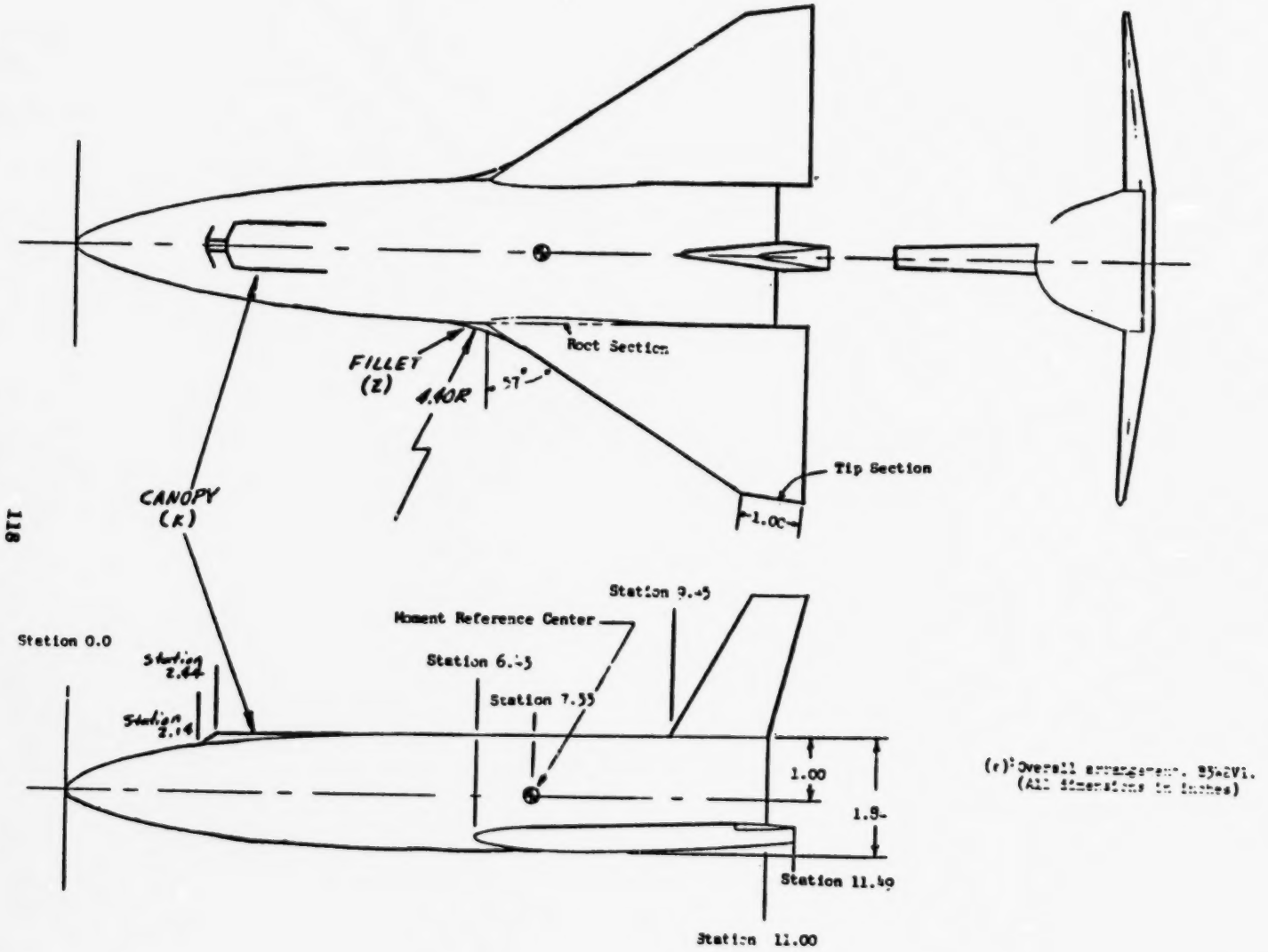

(c) Overall arrangement, B3W2V1.
(All dimensions in inches)

Figure 2. Model Configuration B3W2V1

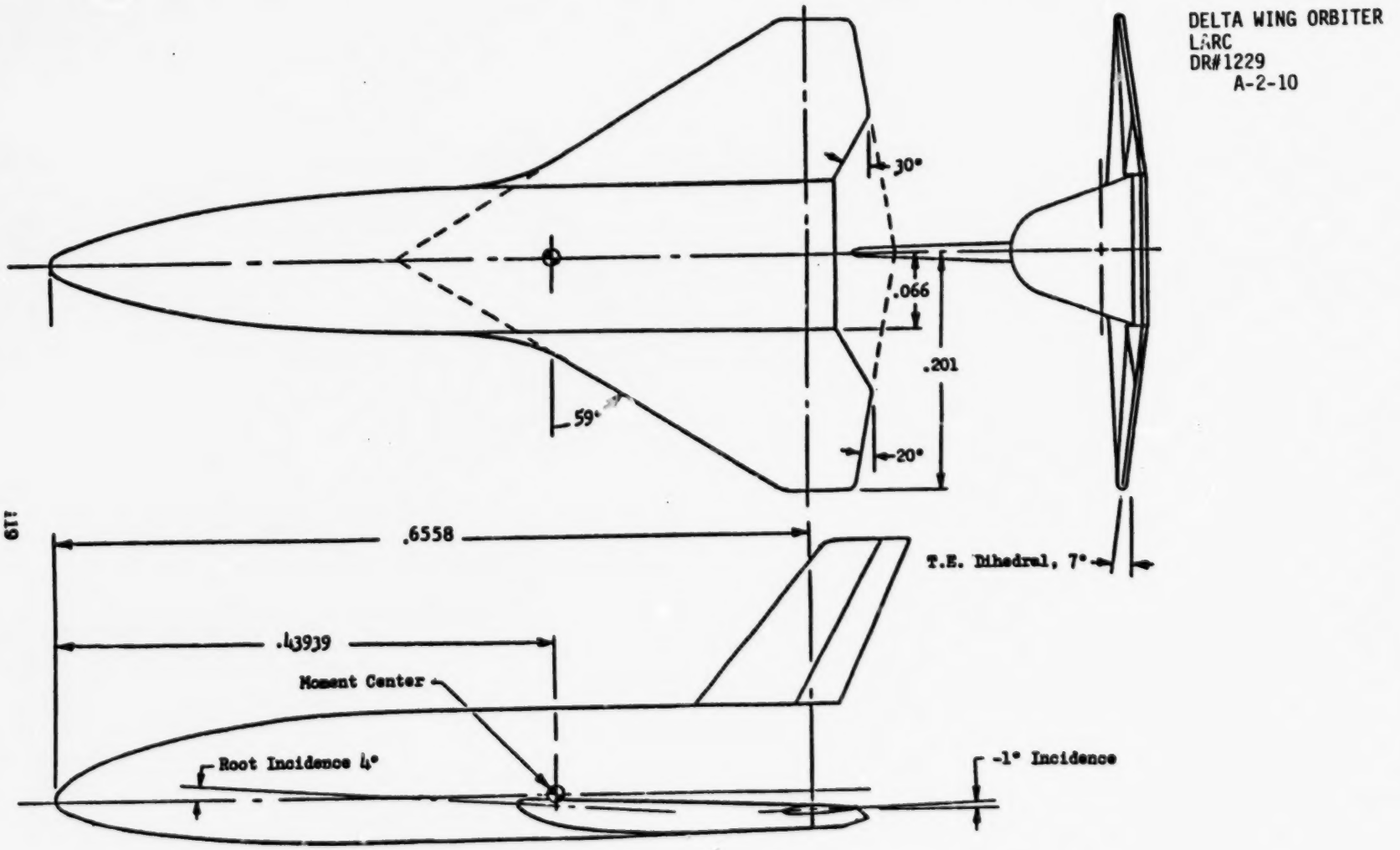

Figure 2.- General arrangement of orbiter with twisted and cambered delta wing. B3N1W1V3. Dimensions are in meters.

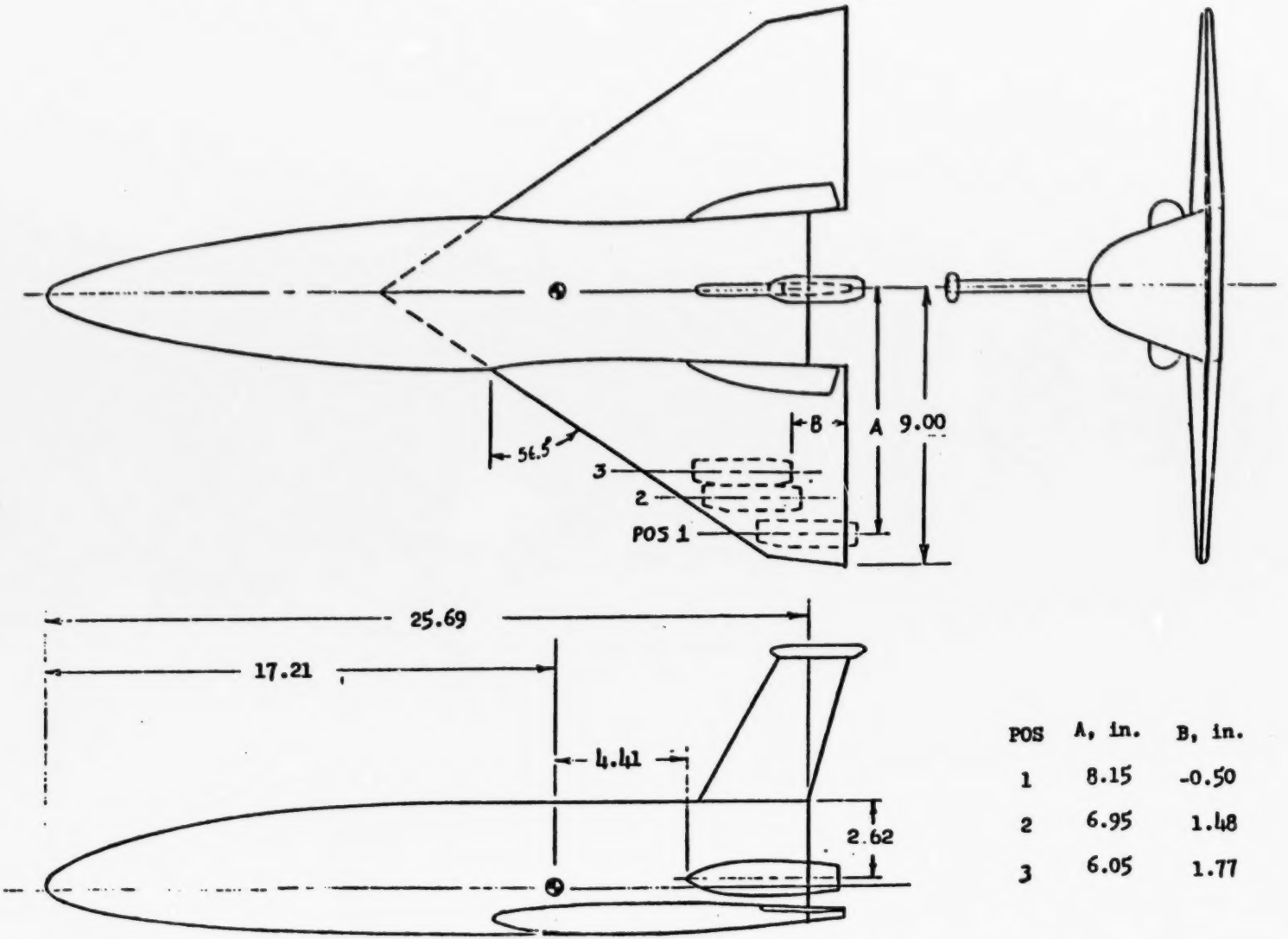

POS	A, in.	B, in.
1	8.15	-0.50
2	6.95	1.48
3	6.05	1.77

Figure 2.- General arrangement of delta wing orbiter model.
All dimensions are in inches.

DELTA WING ORBITER
LARC
DR#1232
A-2-11

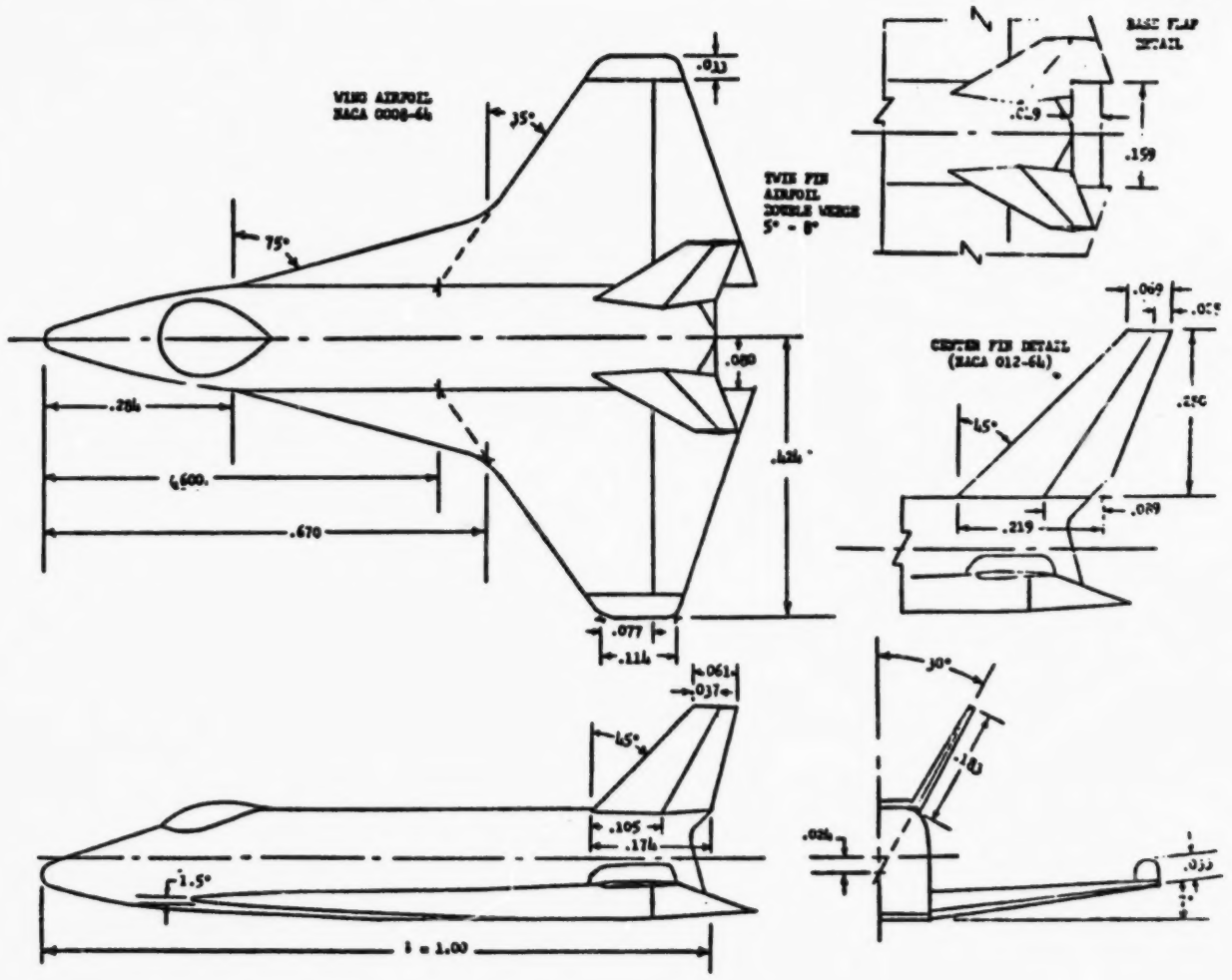

Figure 1. Sketch of Double Delta Orbiter

All dimensions are normalized with respect to body length.
Body length = 62.61 Cm, (24.65 In.)

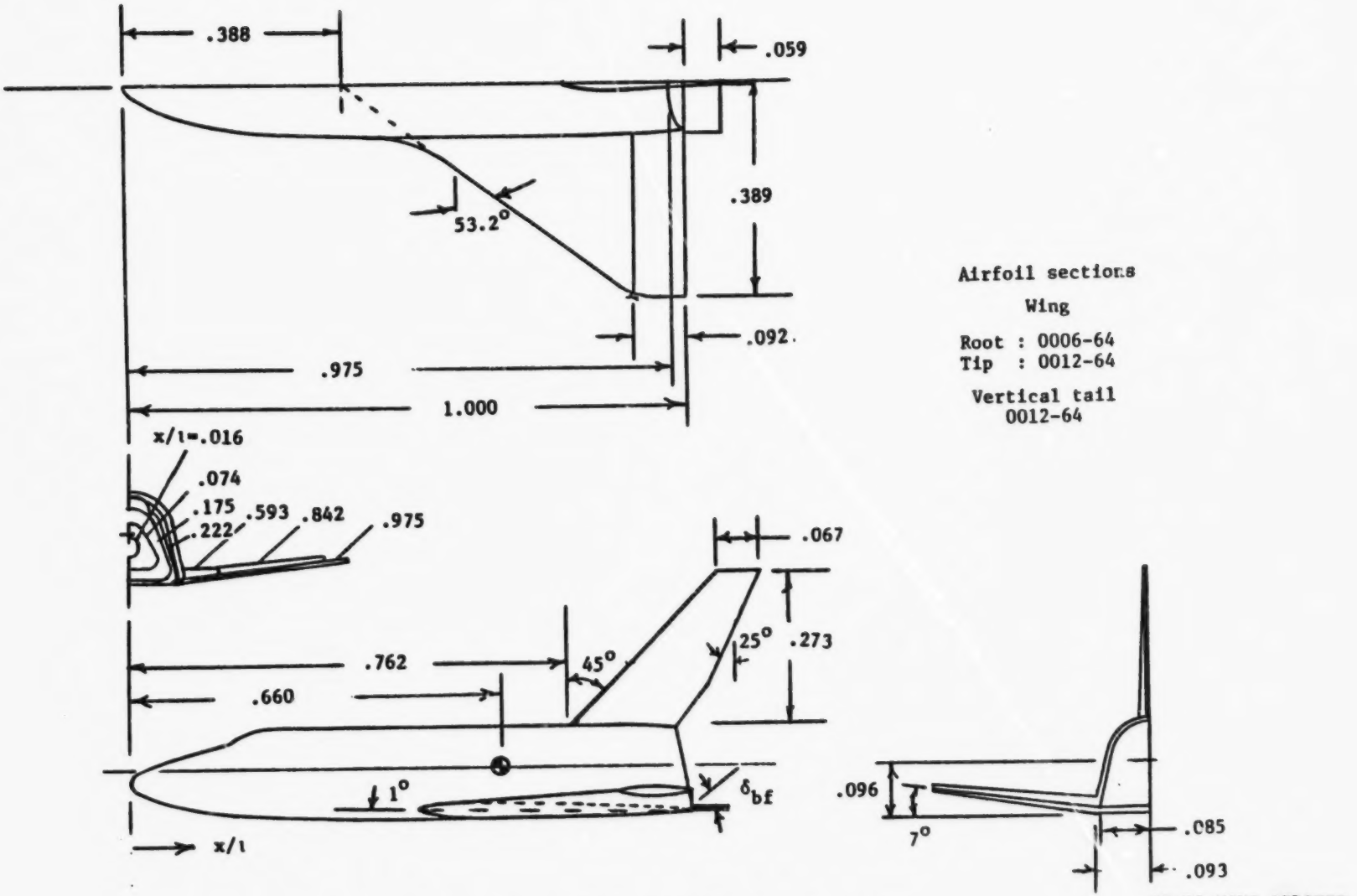

Airfoil sections

Wing

Root : 0006-64
Tip : 0012-64

Vertical tail
0012-64

Figure 2. - General arrangement of LO-100 orbiter.

DELTA WING ORBITER
LARC
DR#2031
A-2-13

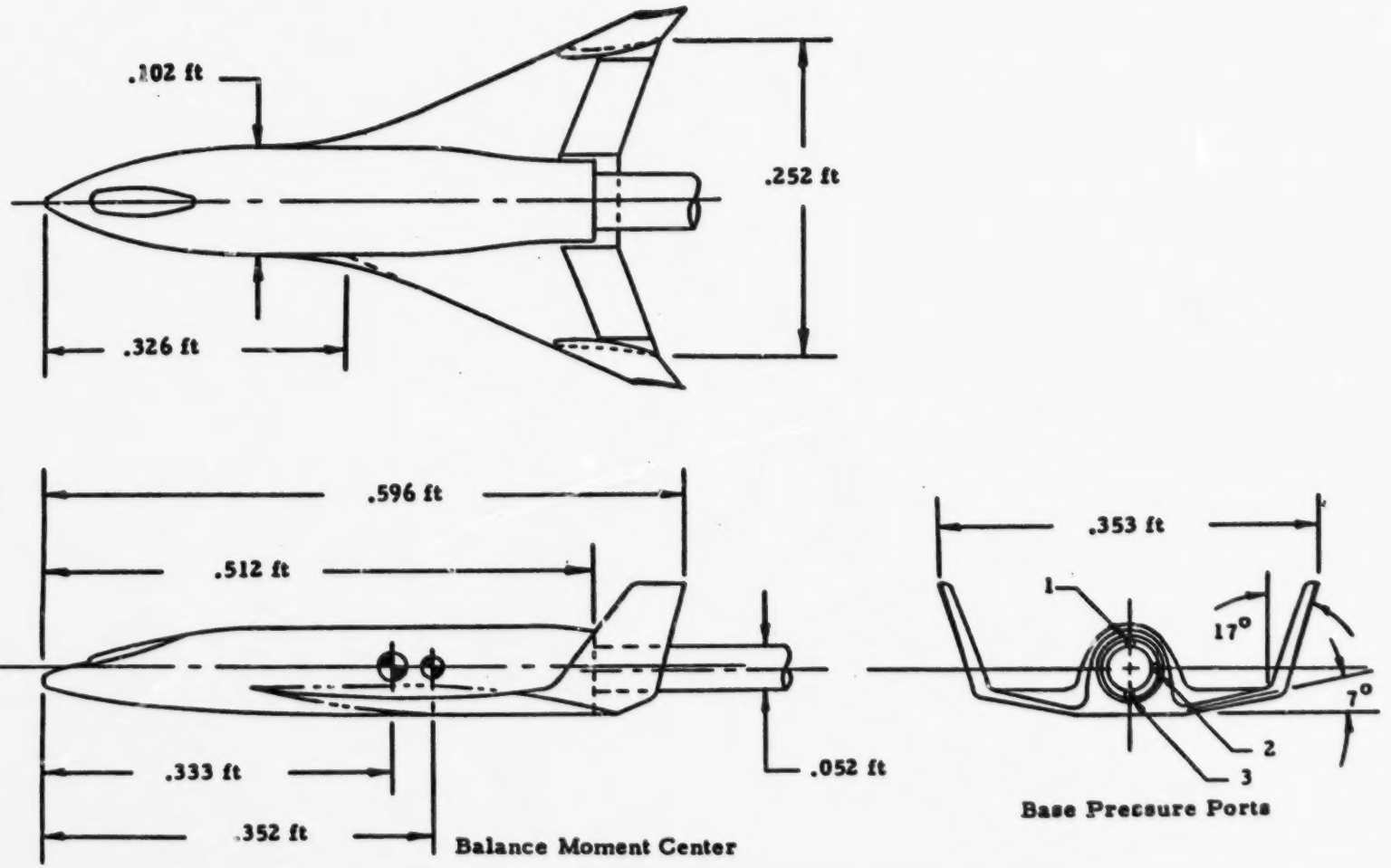

Fig. 2 - General Arrangement – Orbiter Model 1 (Baseline)

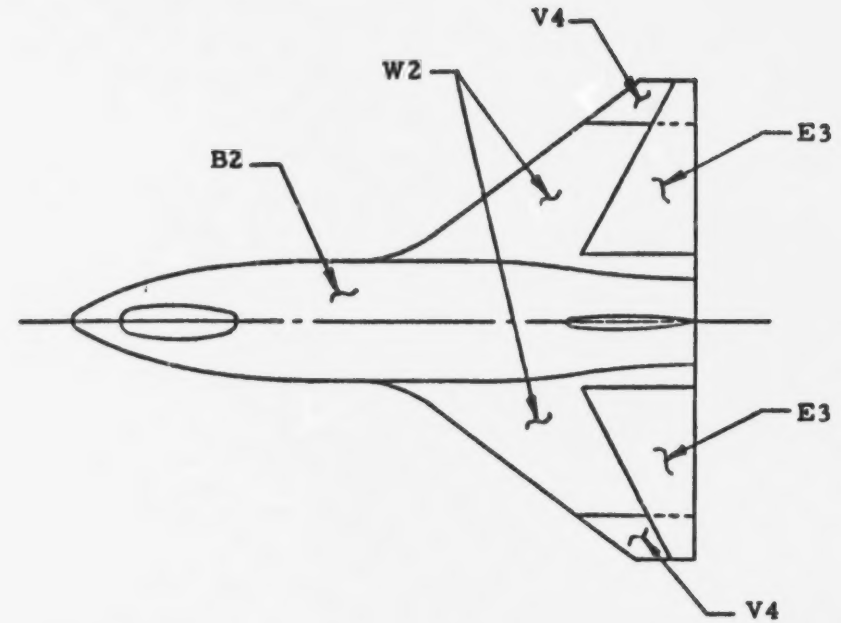

NOTE: Combination B2W2 is identical to B2W5 due to one-piece body/wing.

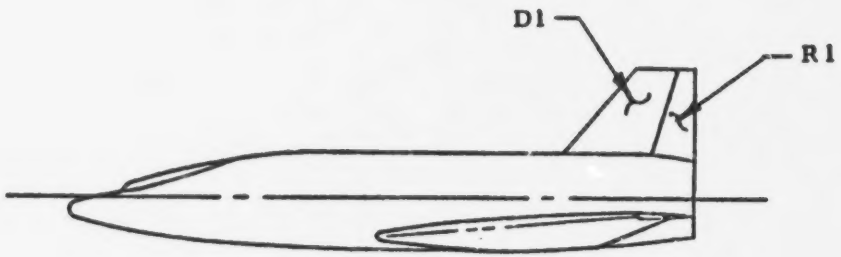

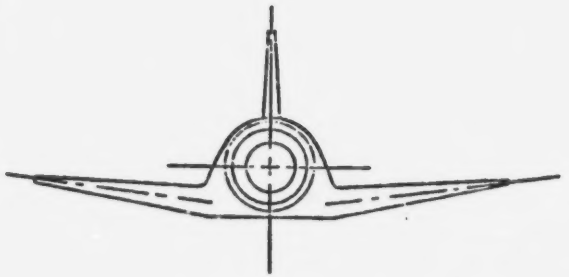

Figure 2. General Arrangement, Orbiter Model 2A, Model Component Location

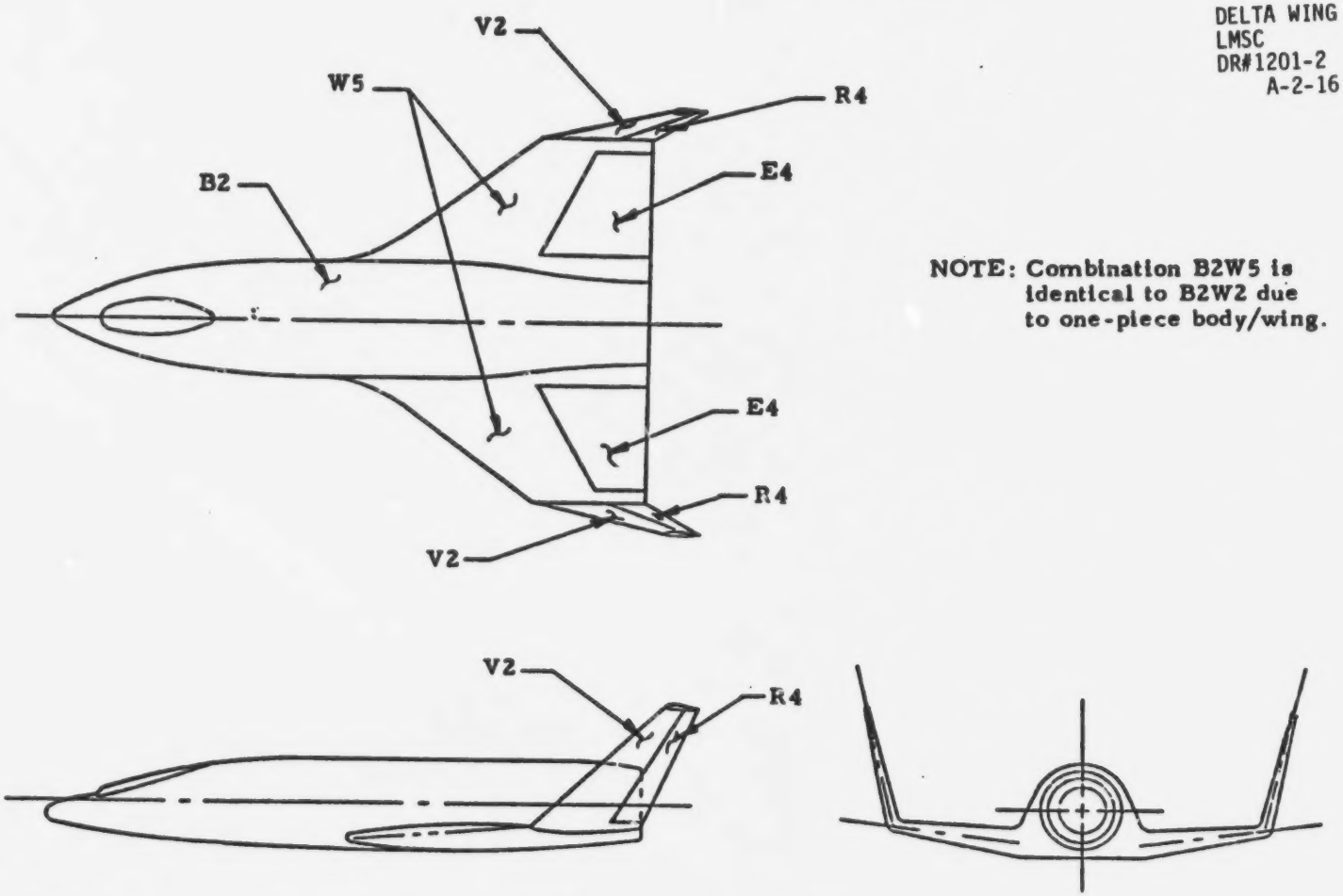

NOTE: Combination B2W5 is identical to B2W2 due to one-piece body/wing.

Figure 3. General Arrangement, Orbiter Model 2B, Model Component Location

Note: All dimensions are model scale, inches

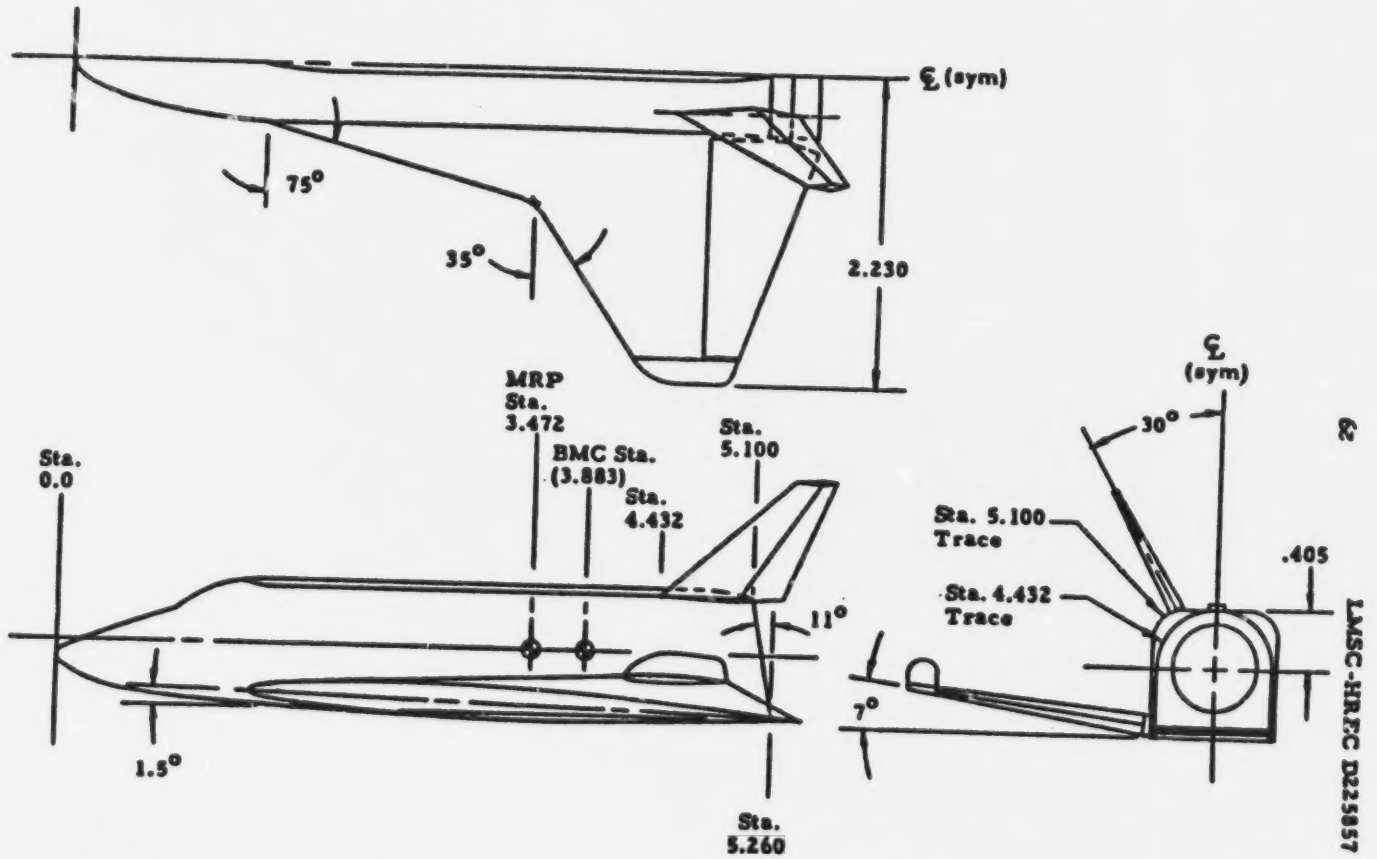

Fig. 2 - General Arrangement, Space Shuttle Orbiter

LOCKHEED - HUNTSVILLE RESEARCH & ENGINEERING CENTER

DELTA WING ORBITER
LMSC
DR#1254
A-2-17

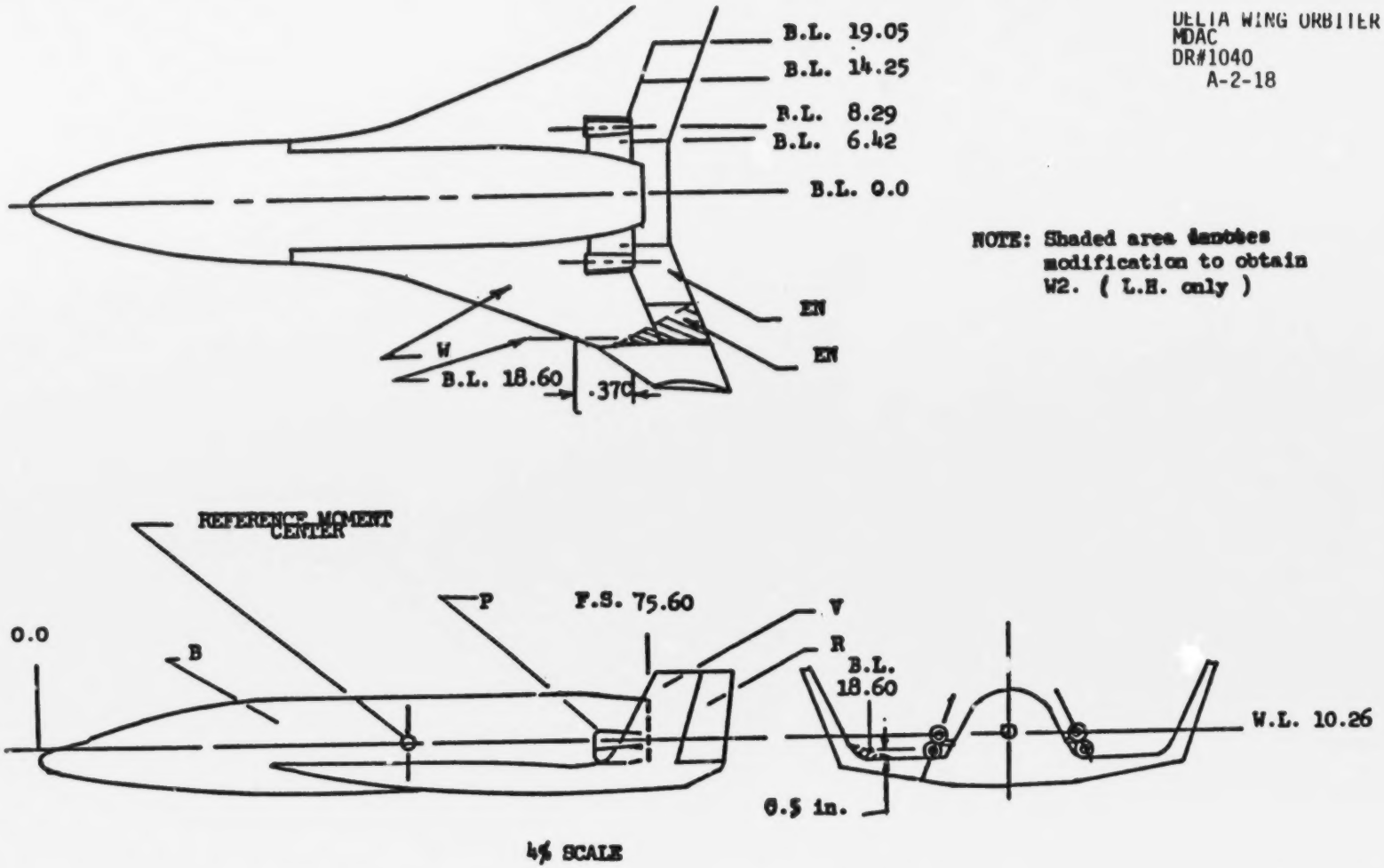

Figure 12. General Assembly High Cross Range Orbiter (02)

NOTE: All dimensions are model scale in inches.
Reference: McDonnell DWG No. STS

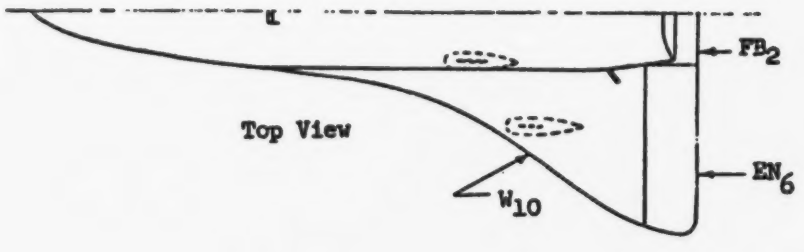

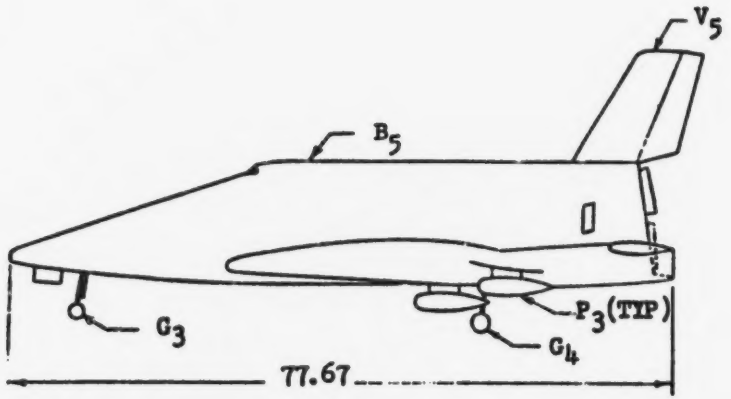

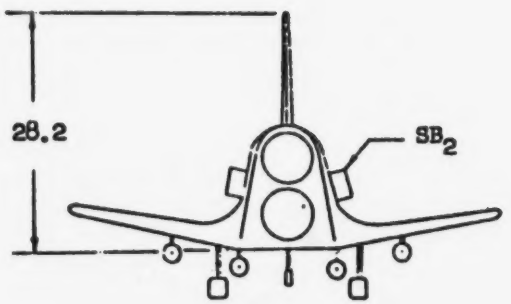

FIGURE 5. - GENERAL ASSEMBLY (B_5 EN_6 FB_2 G_3 G_4 P_3 V_5 W_{10})

REF: MC DONNELL-DOUGLAS DRAWING NO 254
BT 00046 CONTOUR CO. DRAWING NO.
CON 770-1603-MD 02

NOTE: ALL DIMENSIONS ARE MODEL SCALE IN INCHES

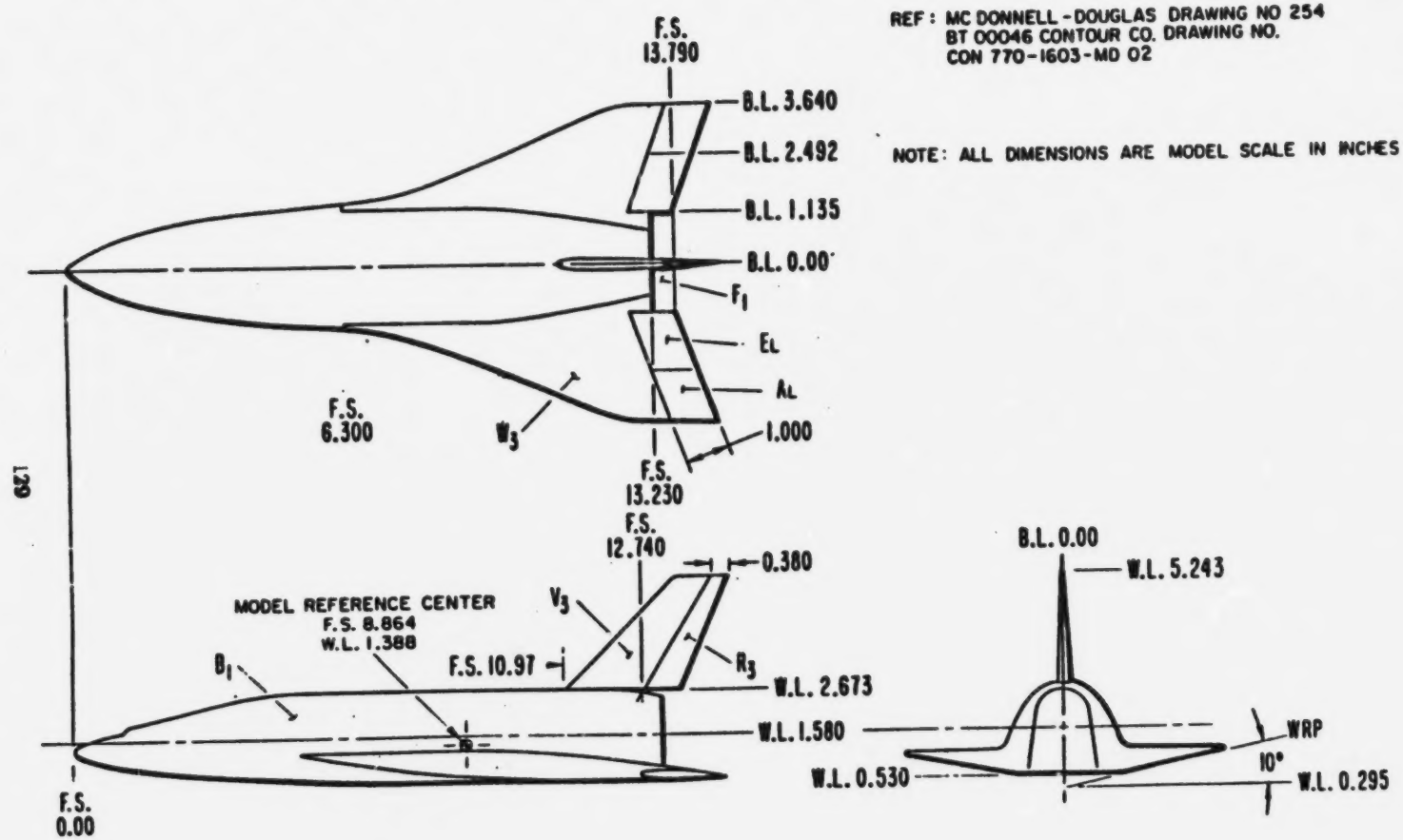

Figure 6.- Delta-wing orbiter model with vertical tail on body center line.

REF MC DONNELL - DOUGLAS DRAWING NO. 255 BT 00014
CONTOUR CO. DRAWING NO. CON-770-1603-MD02

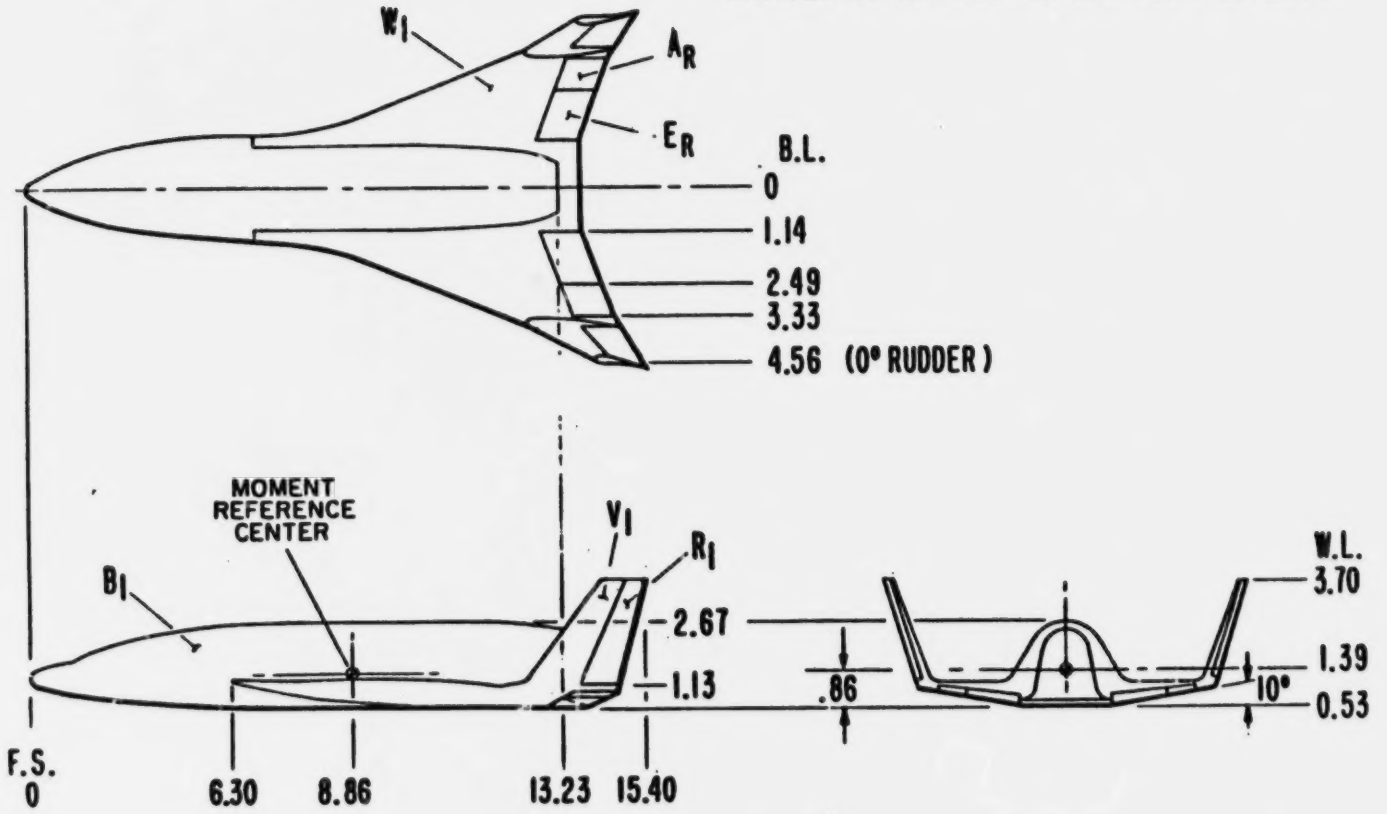

NOTE: ALL DIMENSIONS ARE MODEL SCALE IN INCHES

DELTA WING ORBITER
MDAC
DR#1072
A-2-21

Figure 23.- Delta-wing model with wing tip vertical stabilizers. Configuration $B_1W_1V_1$.

DELTA WING ORBITER
MDAC
DR#1190
A-2-22

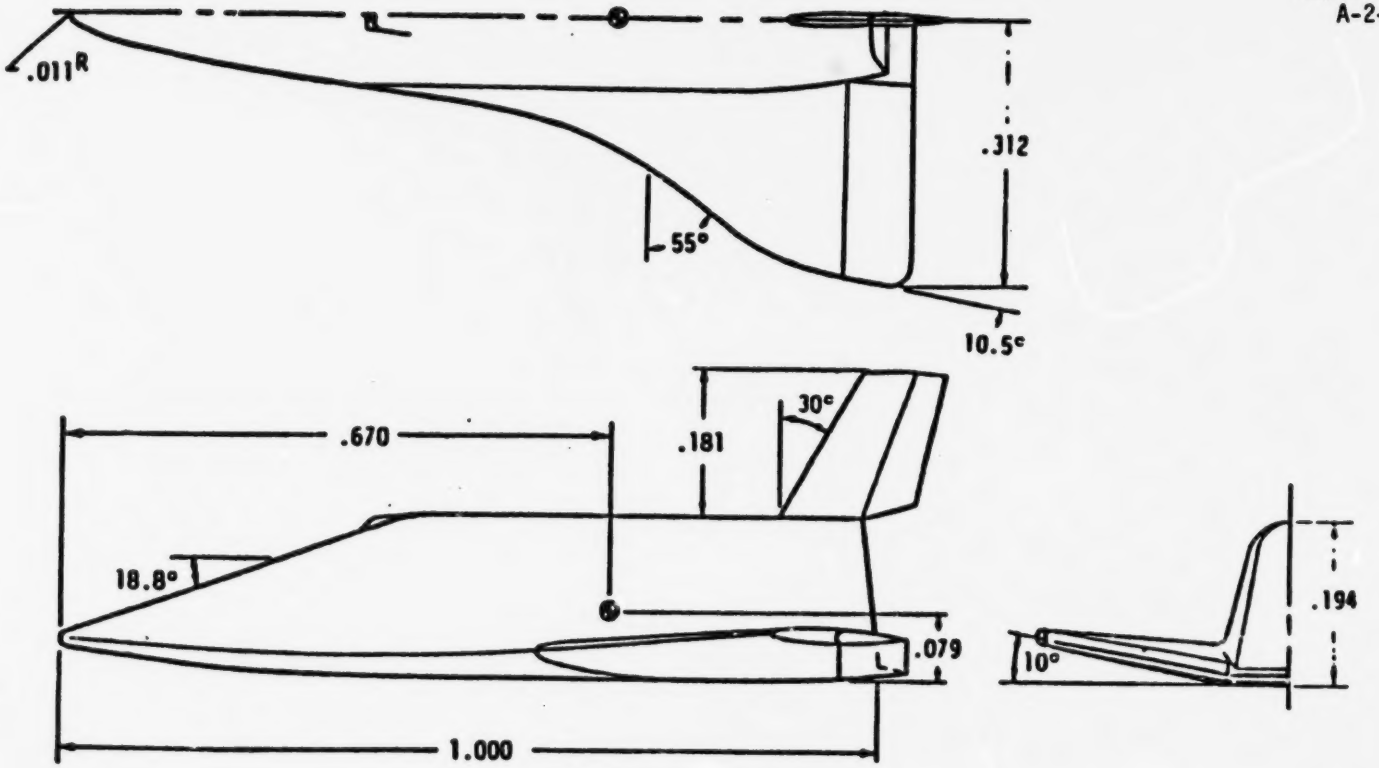

FIGURE 8. MDAC 0050B ORBITER MODEL SKETCH. ALL DIMENSIONS ARE IN TERMS OF BODY LENGTH

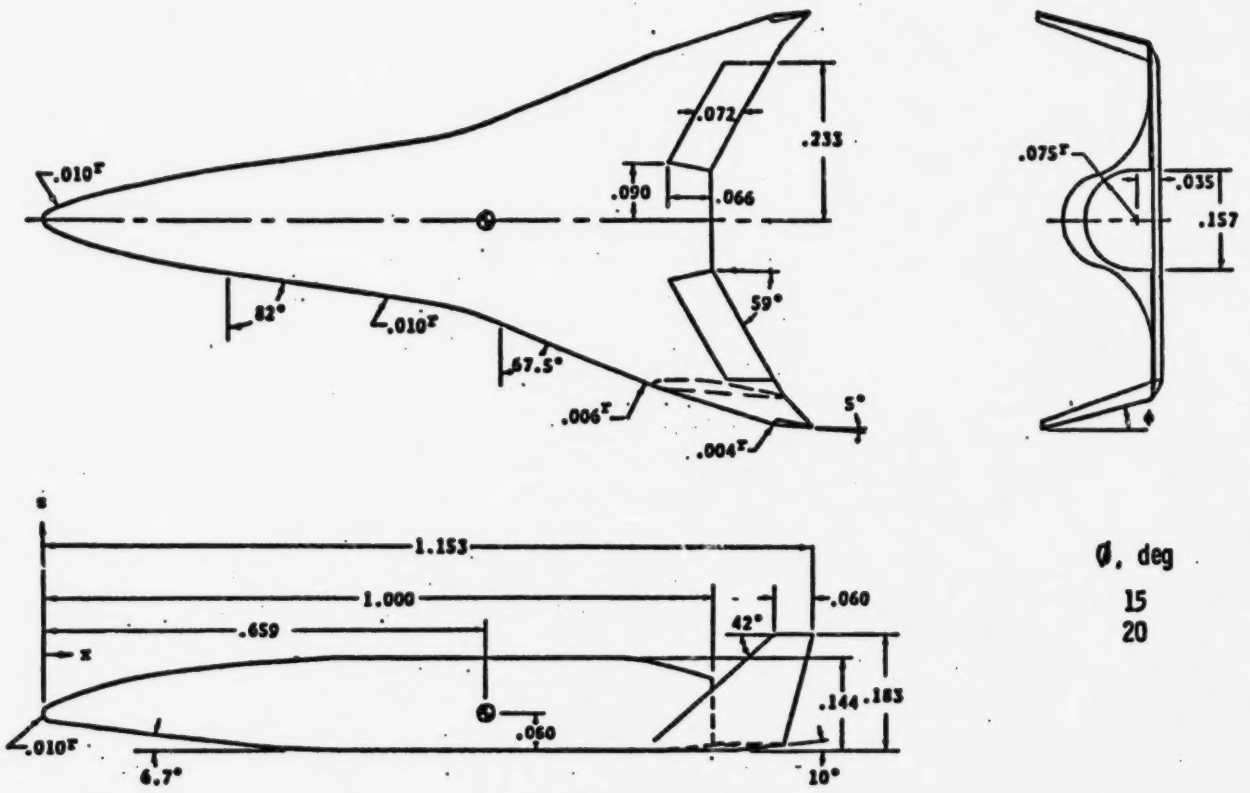

Ø, deg
15
20

NOTE: All dimensions are non-dimensionalized by body reference length.

FIGURE 2. MODIFIED MARTIN DELTA WING ORBITER

DELTA WING ORBITER
MMC
DR#1009
A-2-23

DELTA WING ORBITER
MMC
DR#1059
A-2-24

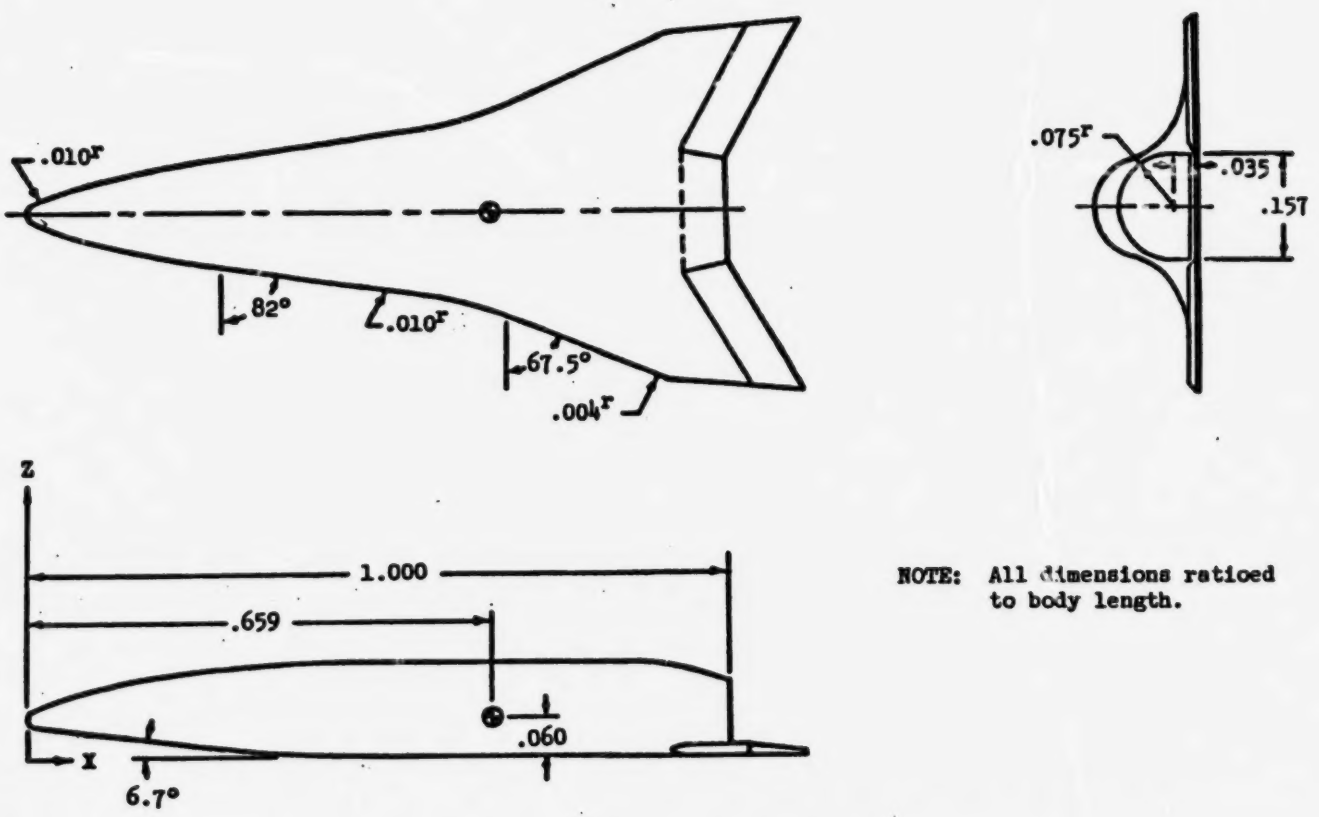

NOTE: All dimensions ratioed to body length.

FIGURE 1. Modified Martin orbiter, FR5-2B, without wing tip fins.

FIGURE 1 - GENERAL ARRANGEMENT, MSC 040 A ORBITER

Note: All dimensions are model scale inches.

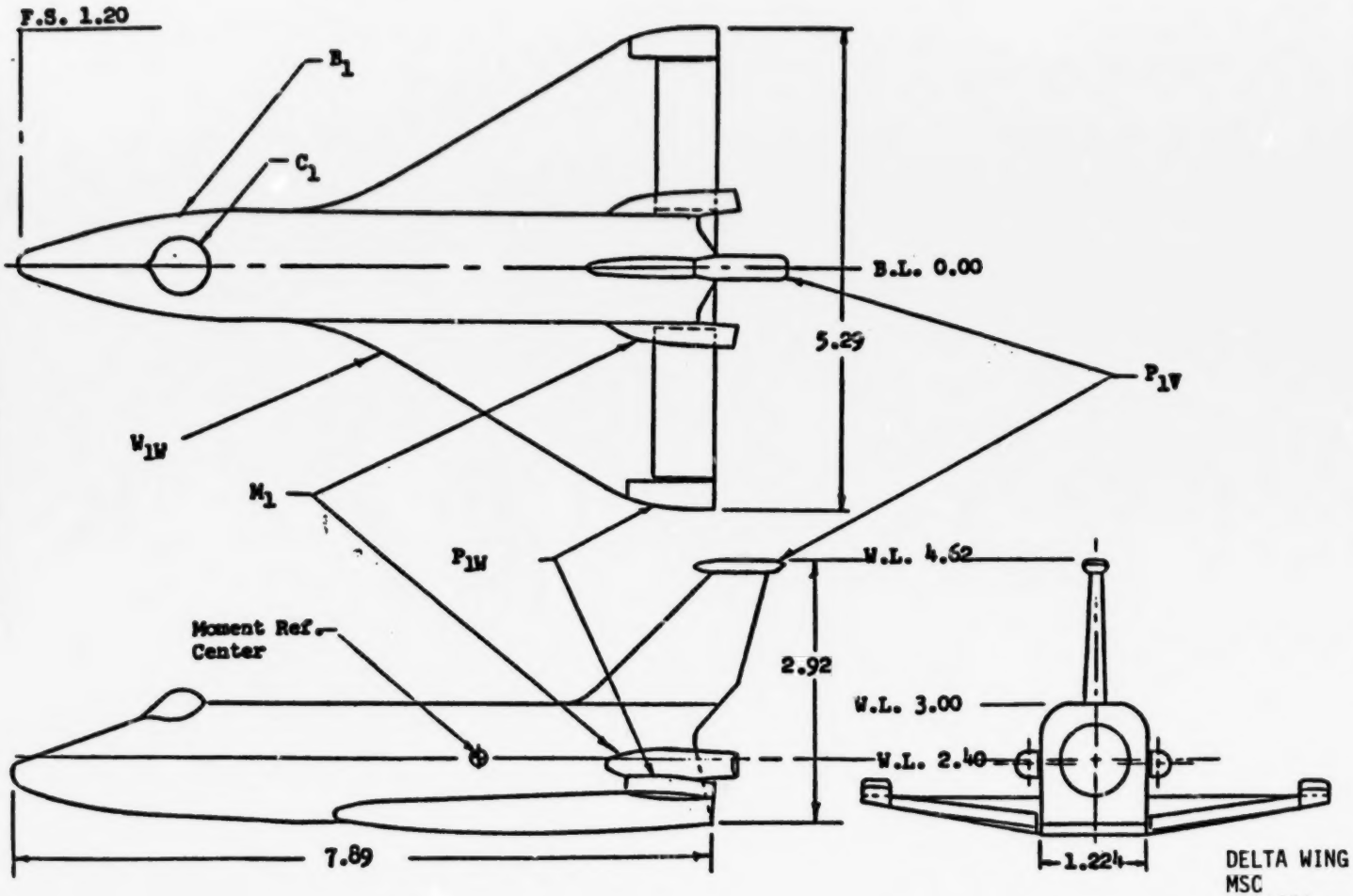

DELTA WING ORBITER
MSC
DR#1243
A-2-25

DELTA WING ORBITER
NR
DR#1107
A-2-26

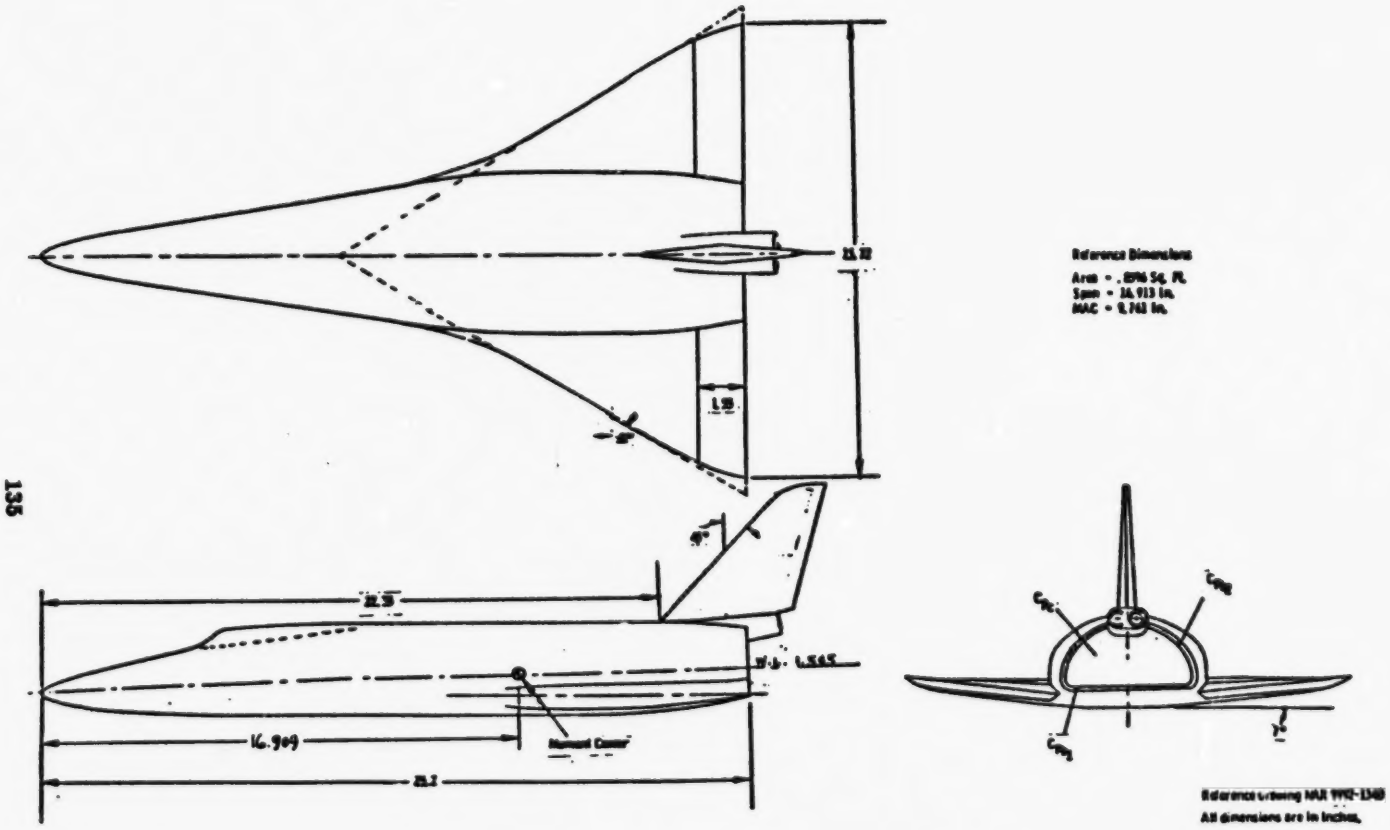

FIGURE 2. LANGLEY 25.2" NR DELTA WING ORBITER MODEL

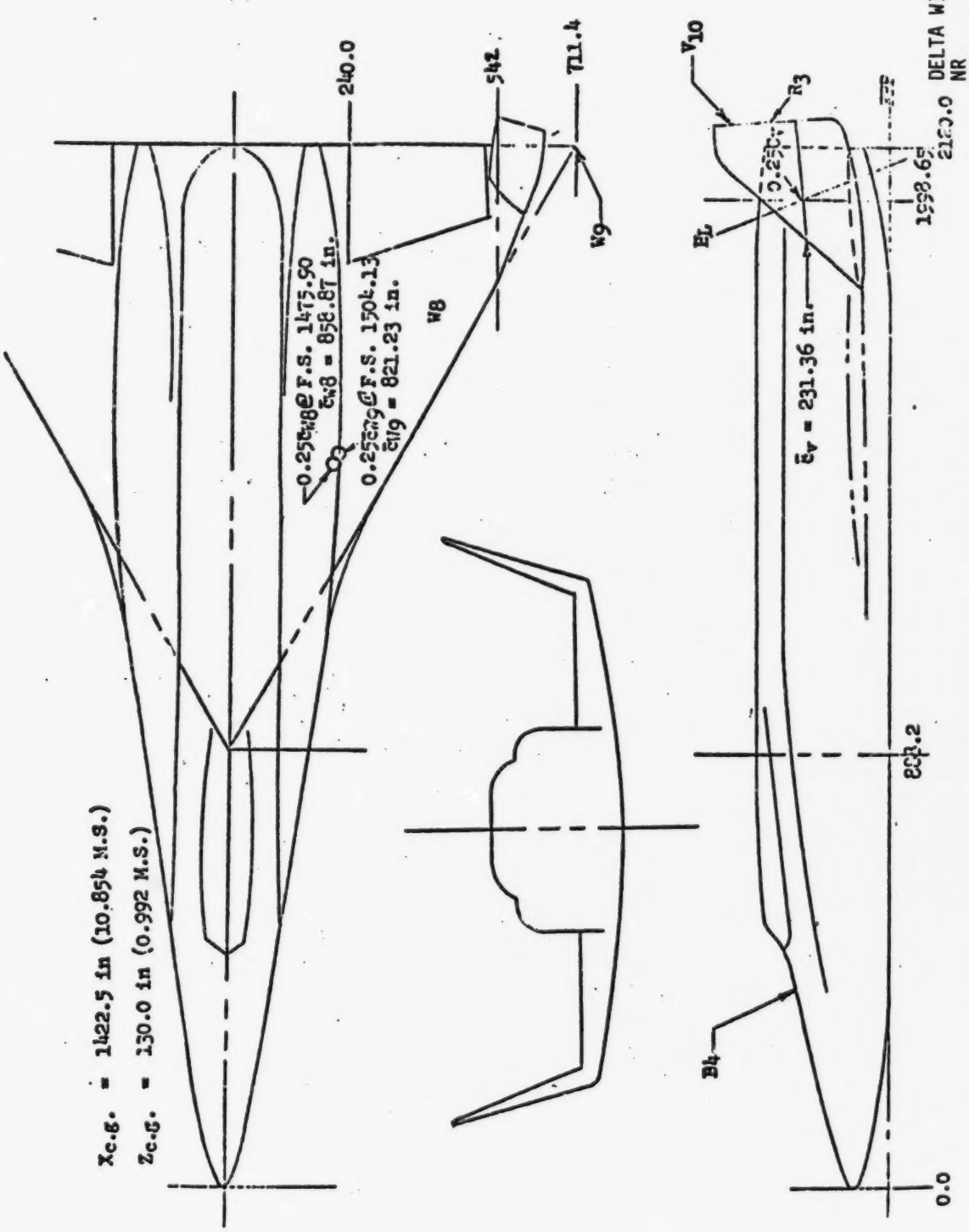

FIGURE 3. DELTA WING ORBITER WITH TWIN TAILS

ORIGINAL PAGE IS
OF POOR QUALITY

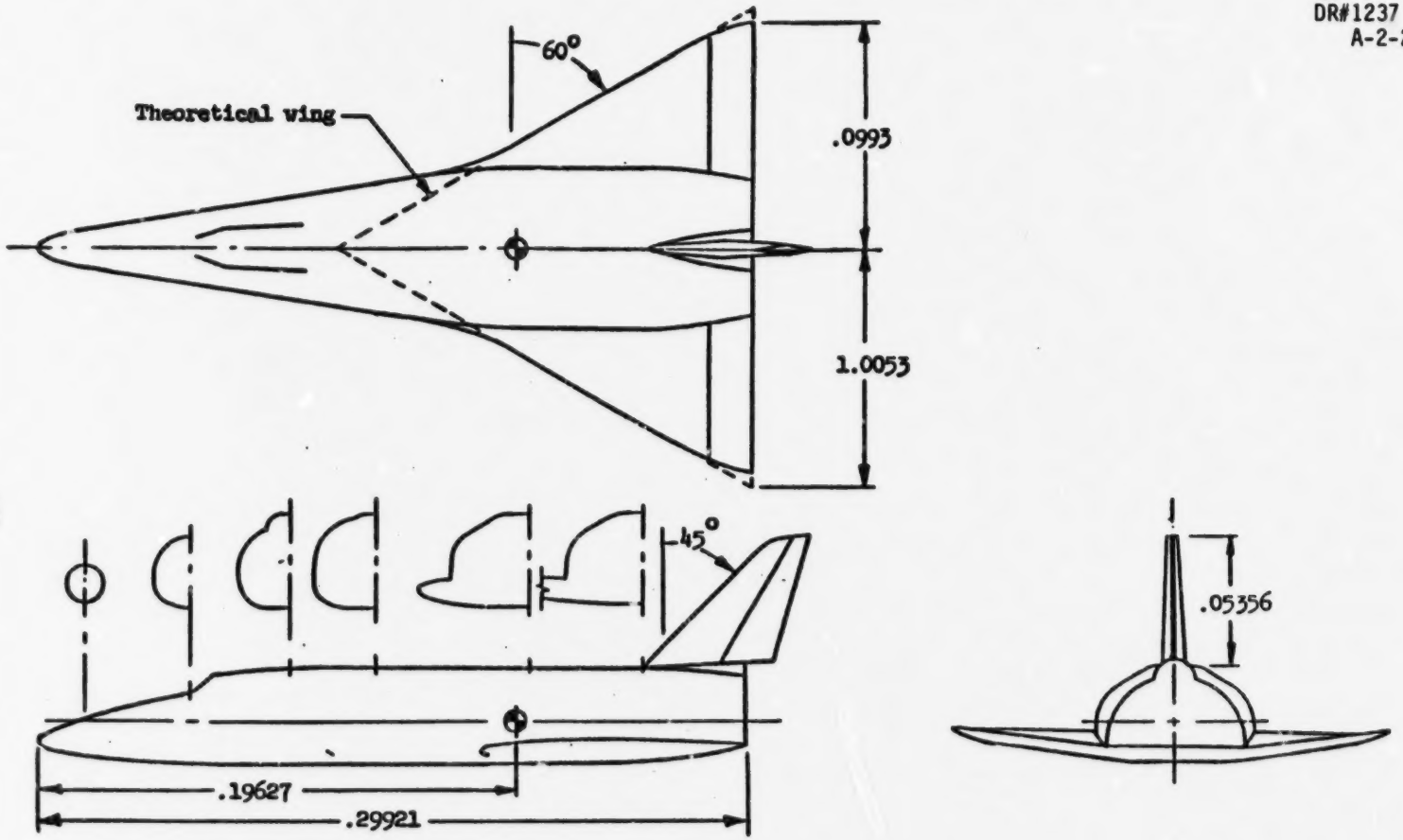

Figure 2. - North American Rockwell 134 D Orbiter
All dimensions are in meters.

GENERAL ASSEMBLY

NOTES: 1. All dimensions model scale in inches.
2. Reference: McDonnell Dwg. STS-03326.

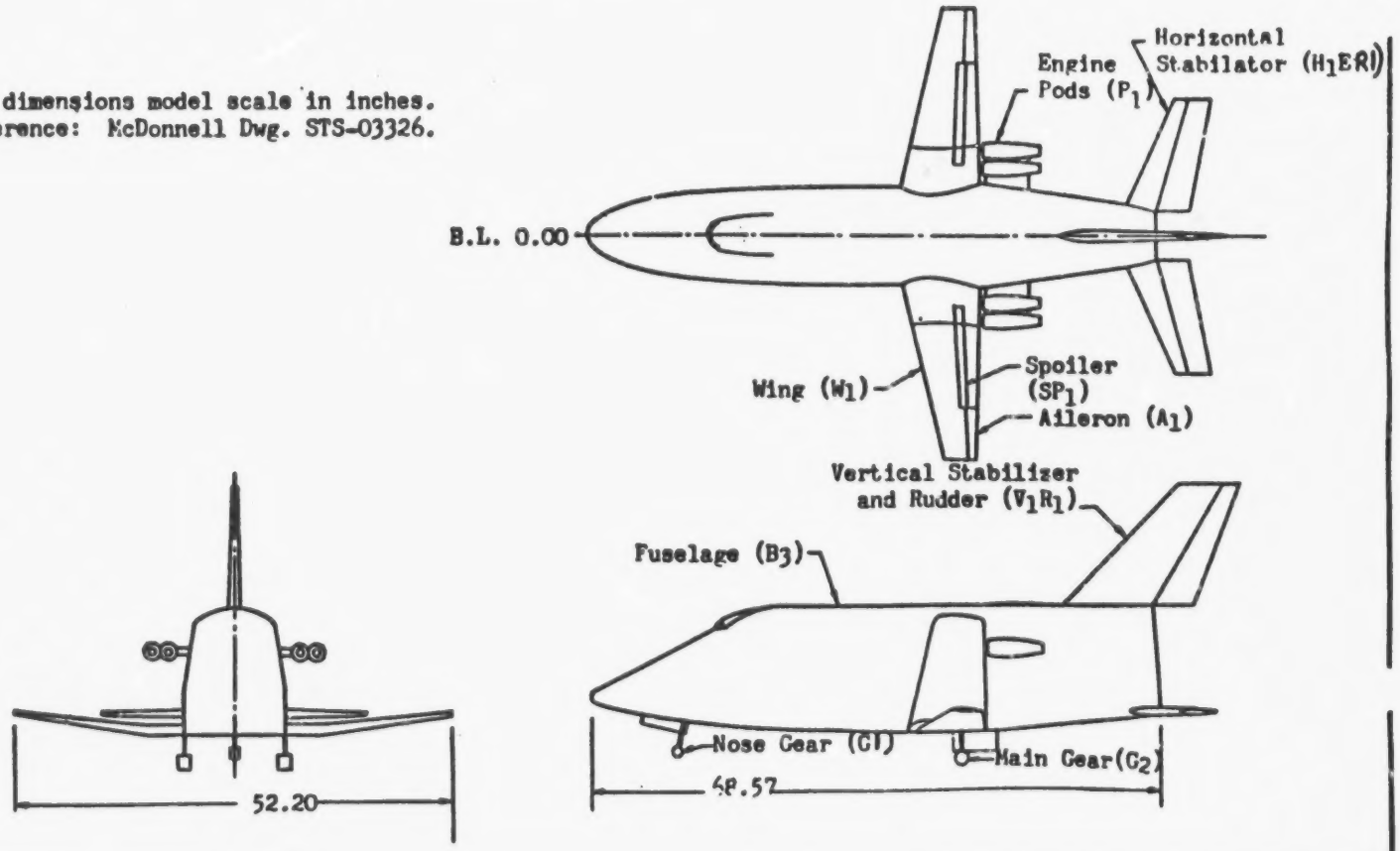

FIGURE 10. GENERAL ASSEMBLY DRAWING

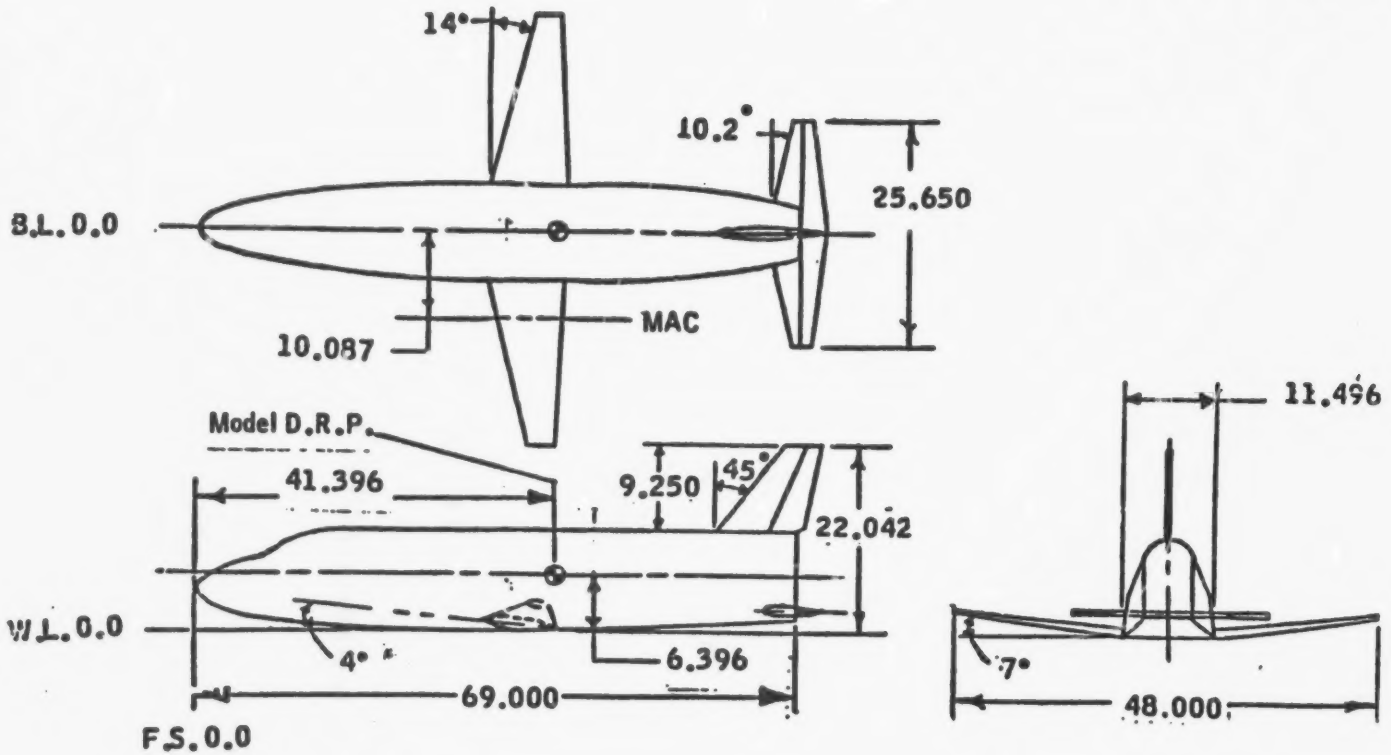

Figure 2. - Model geometry. Configuration $B_1W_2H_6V_3$ (all dimensions in inches)

NAR Straight-wing orbiter model for Ames 6' x 6' wind tunnel tests

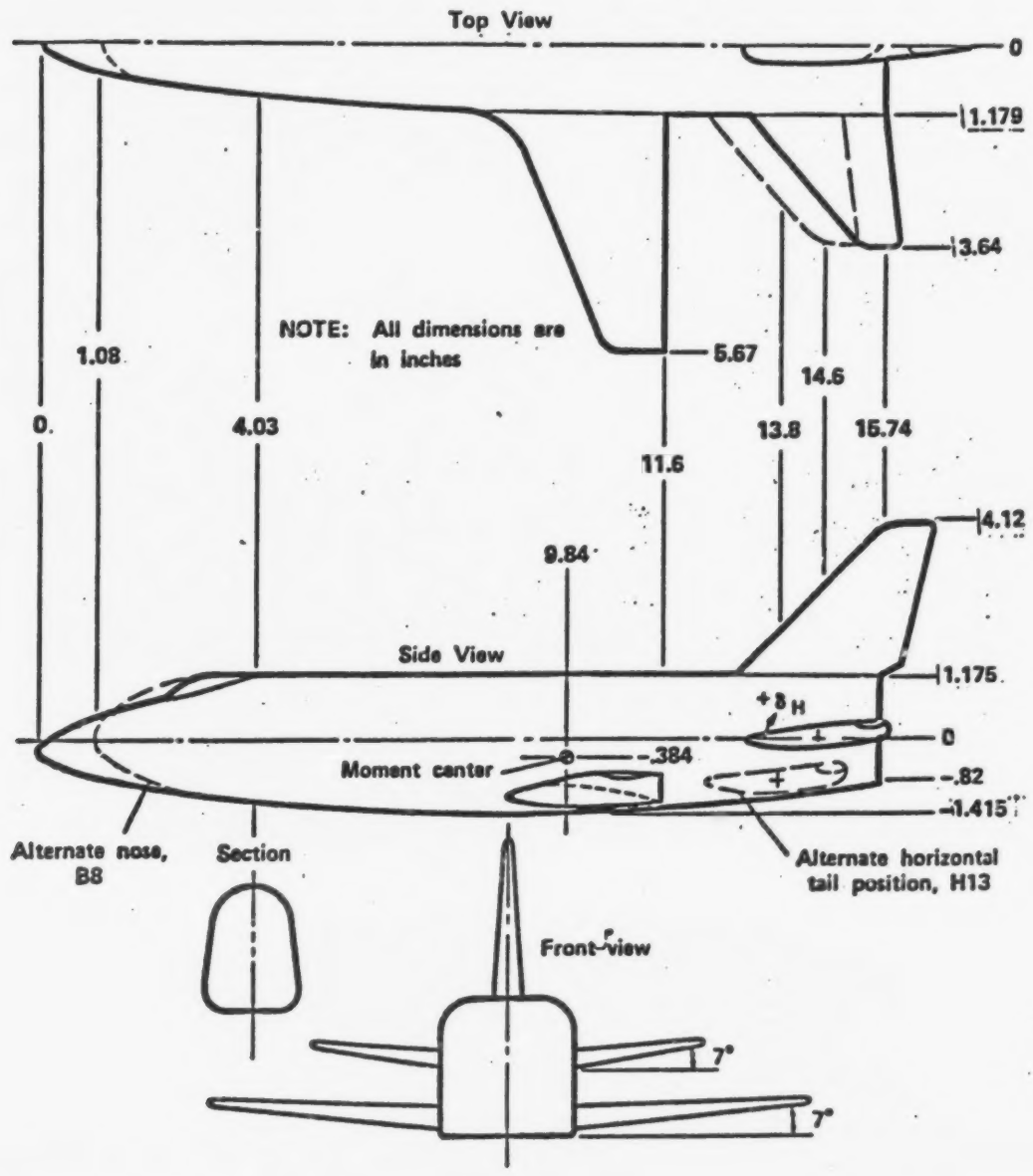

STRAIGHT WING ORBITER
NR
DR# 1026
A-2-31

Figure 4.- NAR Straight Wing Orbiter, Three-View

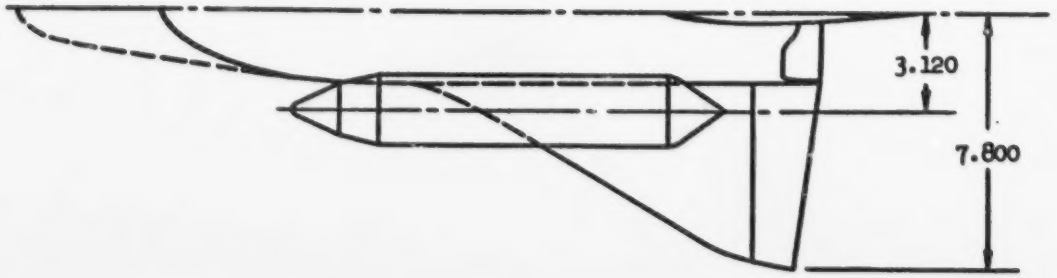

Model dimensions in inches

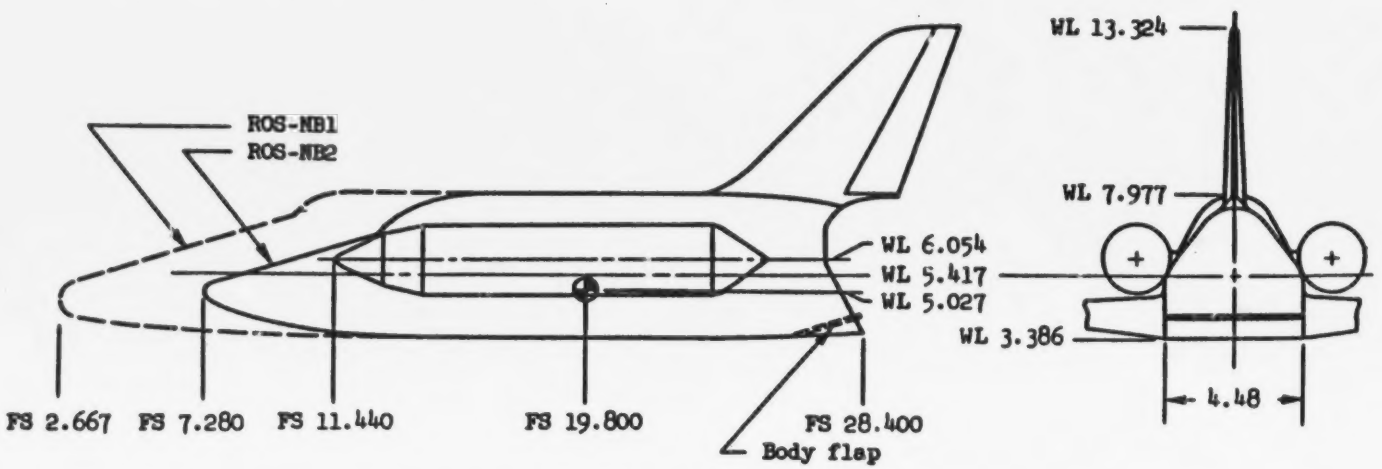

Figure B-. Three view - ROS-NB1 and ROS-NB2 configurations.

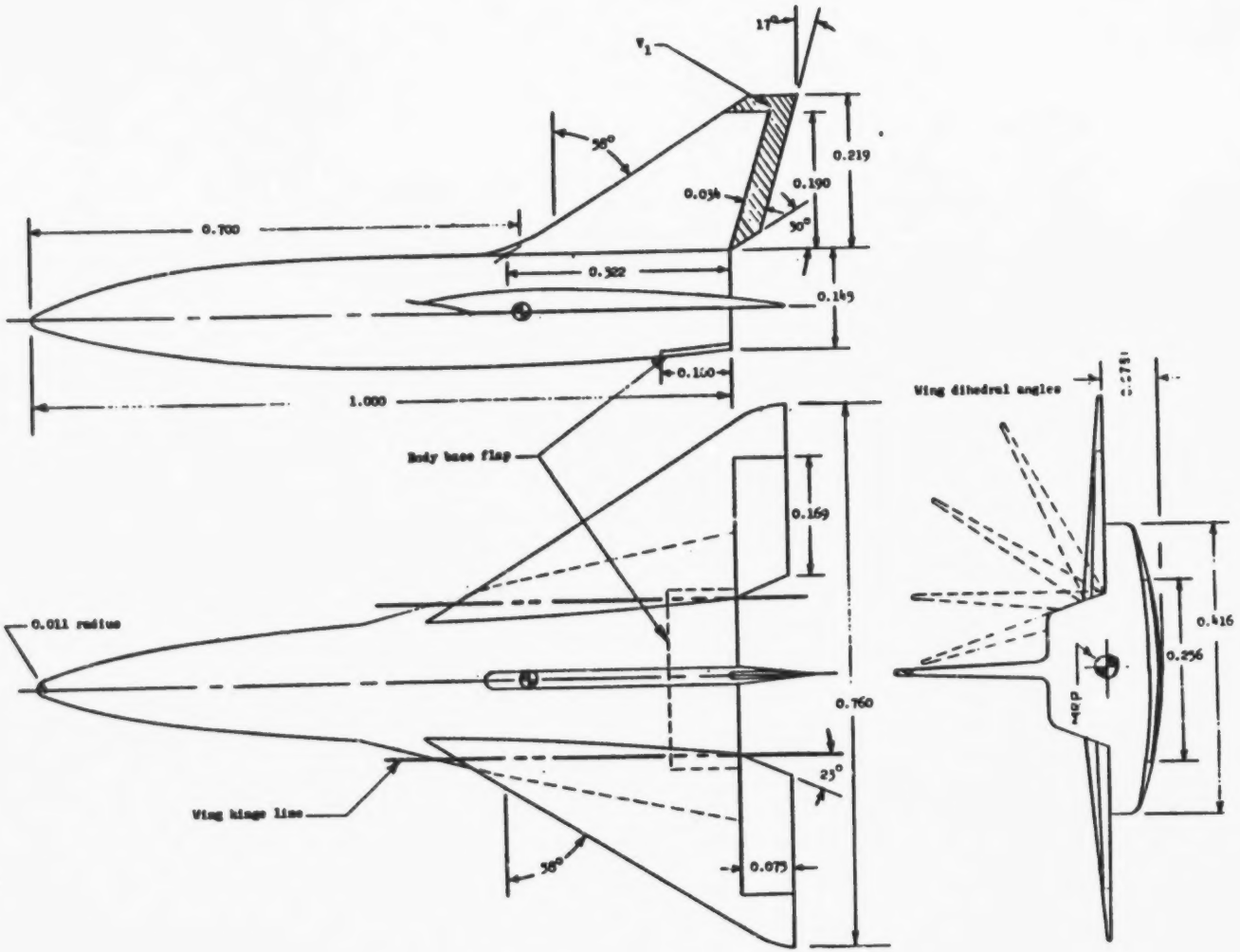

Figure 1.- Sketch of model used in investigation. All dimensions are normalized with respect to body length. Body length = 20.5 inches.

UNIQUE CONFIG. ORBITER
LARC
DR#1018
A-2-33

FIGURE 5. DTO-7 ORBITER ASCENT CONFIGURATION, 01 D1

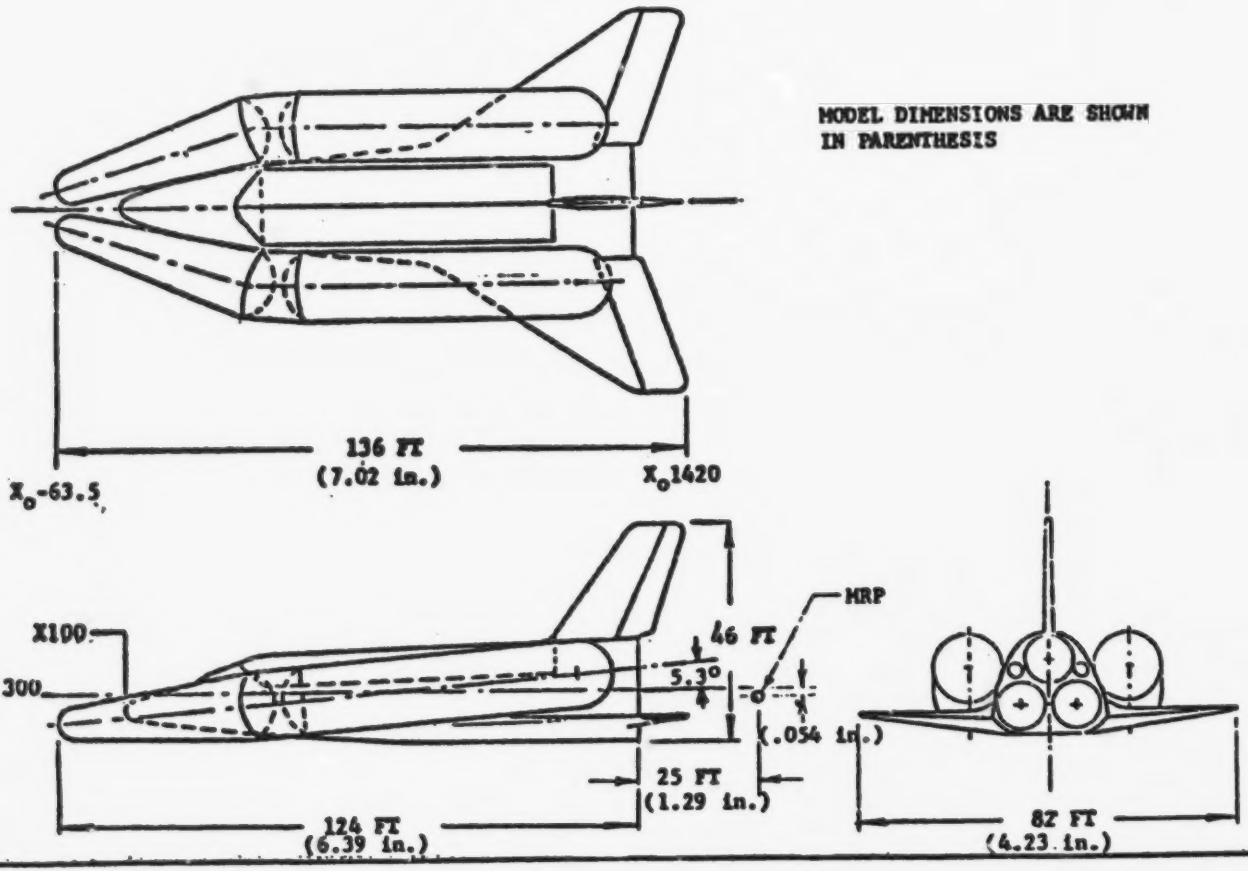

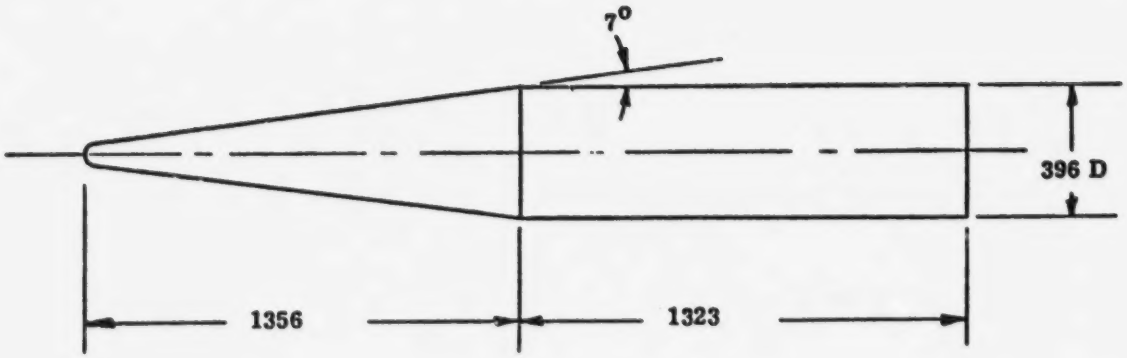

RNS

Figure 5. General Arrangement - Reuseable Nuclear Stage

UNIQUE CONFIG. ORBITER
NR
DR#1162
A-2-35

APPENDIX A-3

MODEL FIGURES

LAUNCH AERODYNAMICS

NOTE: ALL DIMENSIONS ARE MODEL SCALE IN INCHES

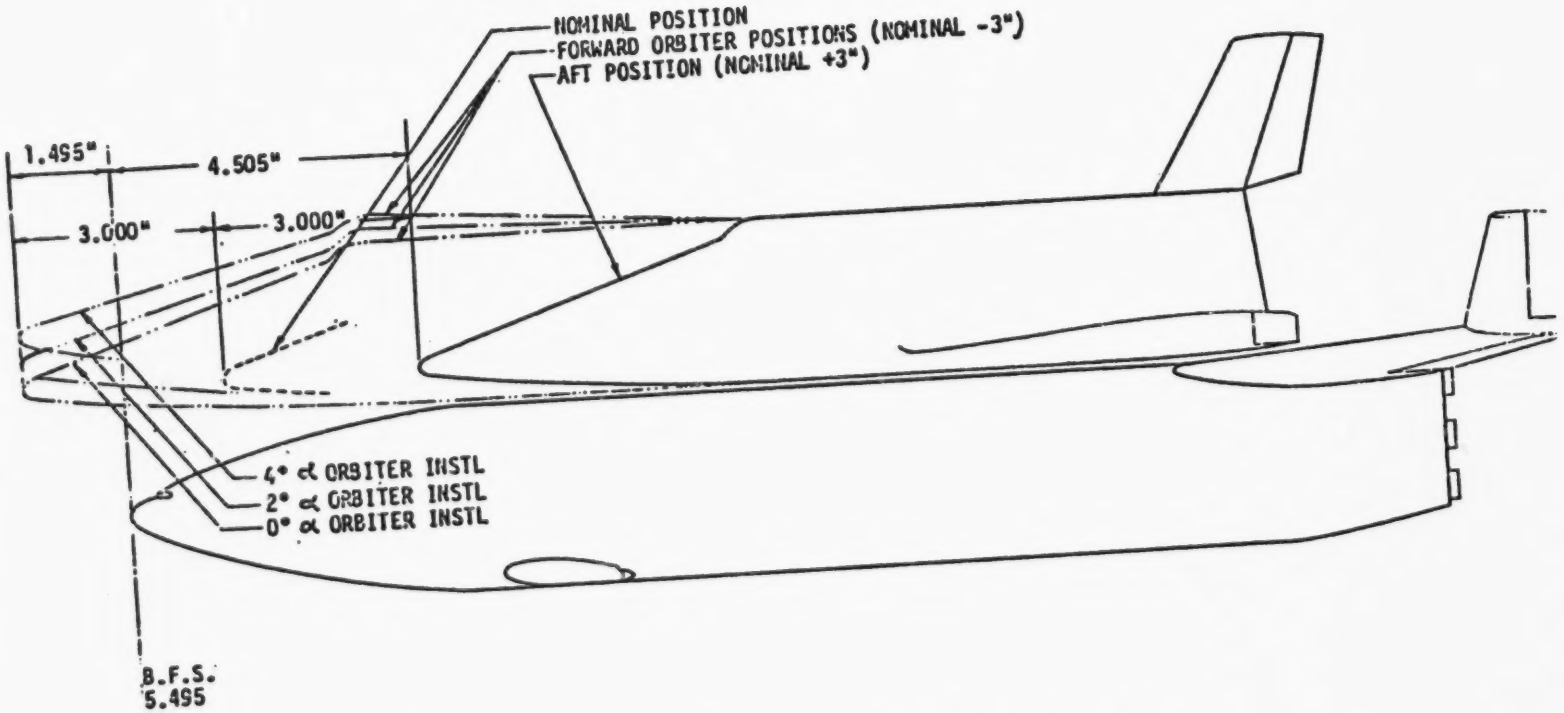

ORBITER SHOWN IN AFT (NOMINAL +3") BOLTED DOWN POSITION
WITH NOMINAL AND FORWARD (NOMINAL -3") POSITIONS INDICATED

Figure B.- Space Shuttle Ascent Configuration

CANARD BOOSTER
MDAC
DELTA WING ORBITER
DR#1118
A-3-1

PRECEDING PAGE BLANK NOT FILMED

CANARD BOOSTER
MDAC/MMC
DELTA WING ORBITER
MDAC
DR#1190 A-3-2

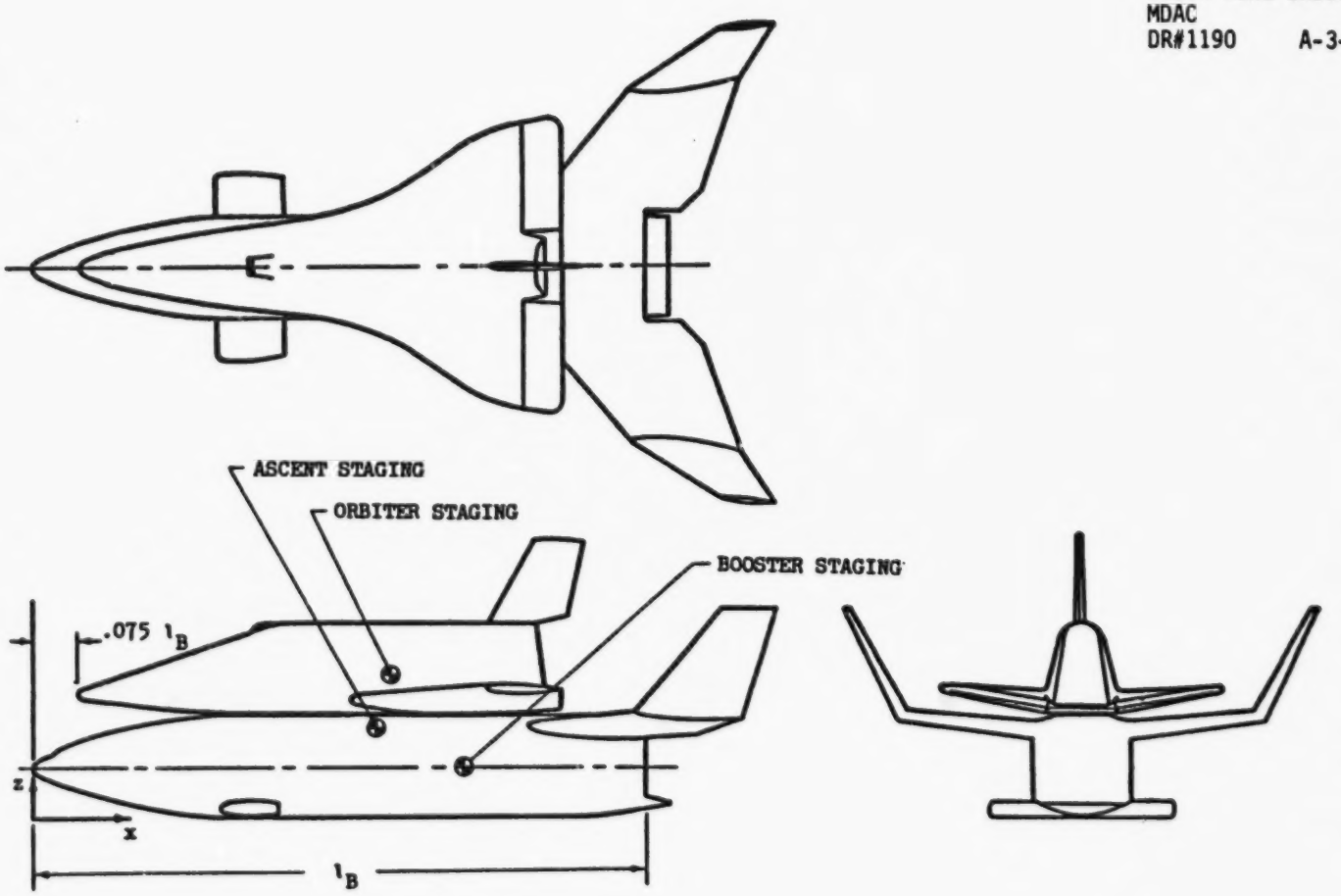

FIGURE 3. MDAC/MMC ASCENT CONFIGURATION. CENTER OF GRAVITY NOTED FOR DIFFERENT CONDITIONS.

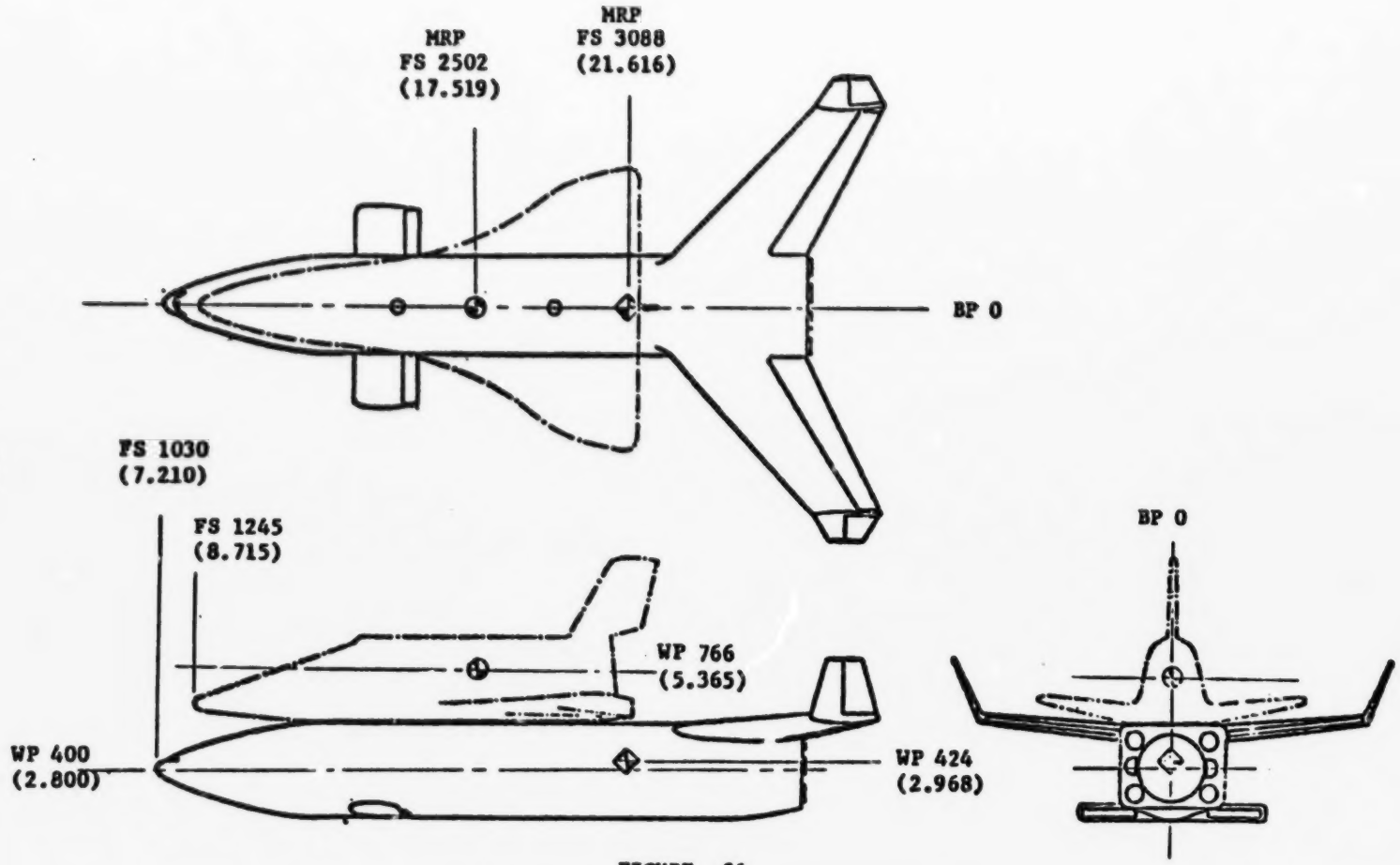

FIGURE 21

SPACE SHUTTLE ASCENT CONFIGURATION (0.00Z)

ORBITER INDICATED IN NOMINAL POSITION AT 0° INCIDENCE

CANARD BOOSTER
MDAC/MMC
DELTA WING ORBITER
MDAC
DR#1117 A-3-3

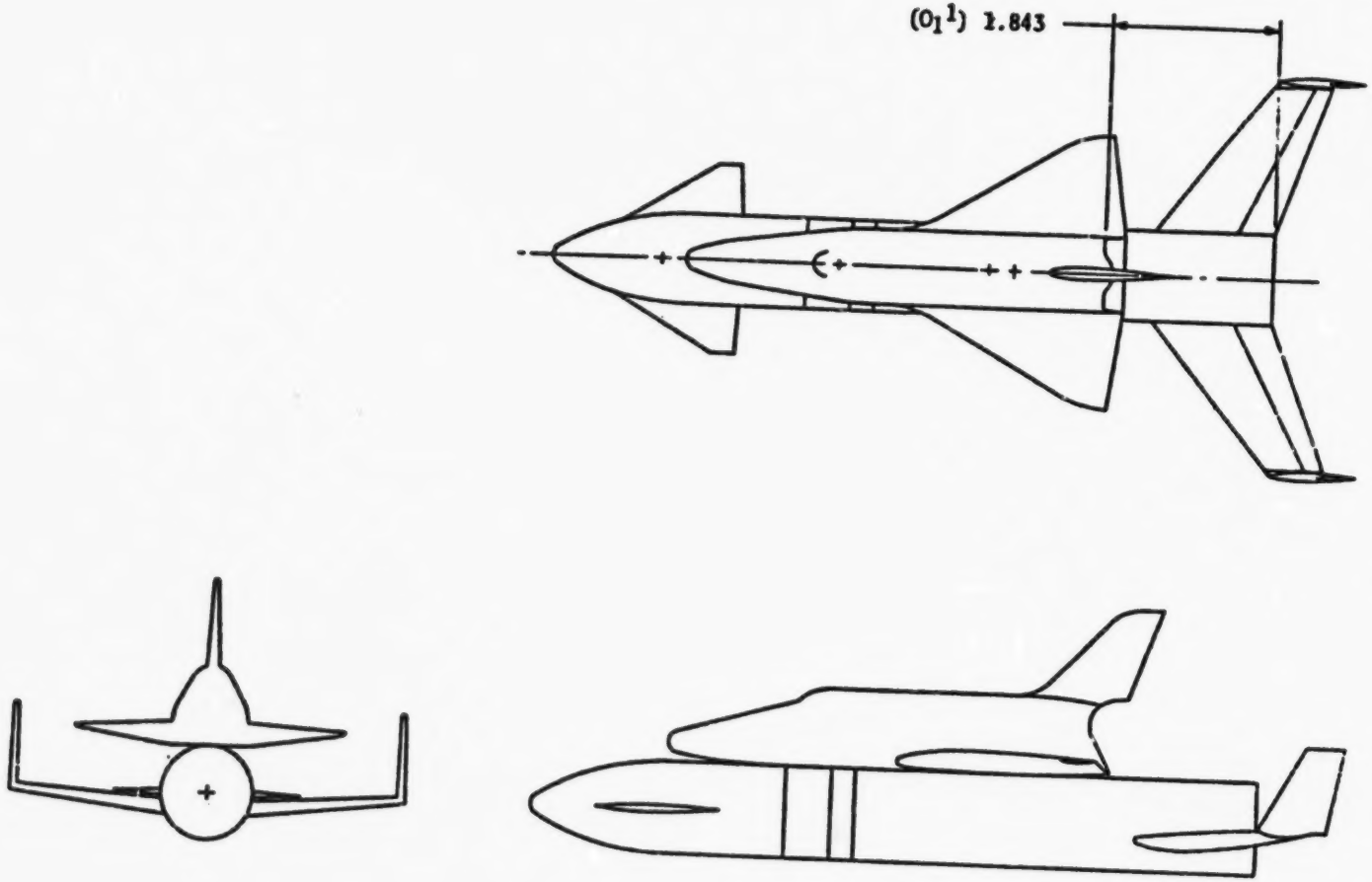

FIGURE 7. BOOSTER ORBITER CONFIGURATION

TYPICAL BOOSTER + ORBITER COMPOSITE MODEL CONFIGURATIONS

CANARD BOOSTER
MDAC
STRAIGHT WING ORBITER
MDAC
DR#1065 A-3-5

High Wing-Booster + HCR Orbiter

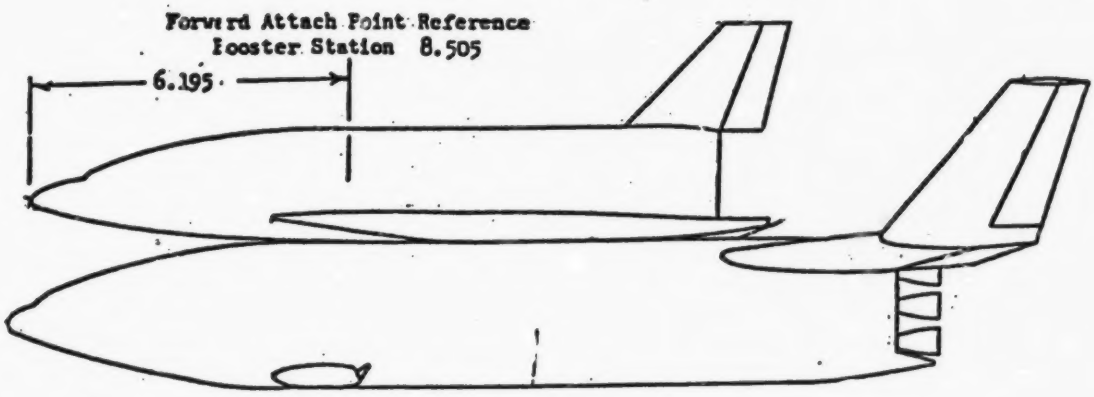

High Wing Booster + LCR Orbiter

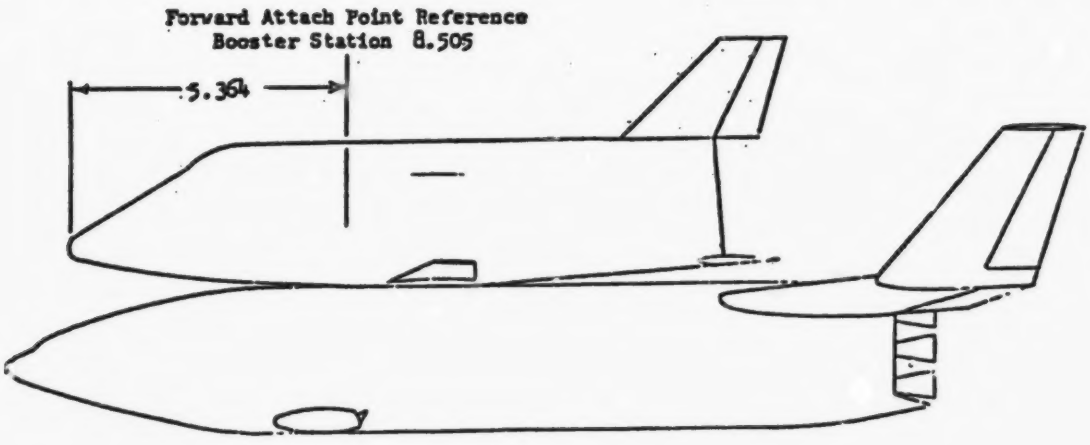

FIGURE 5

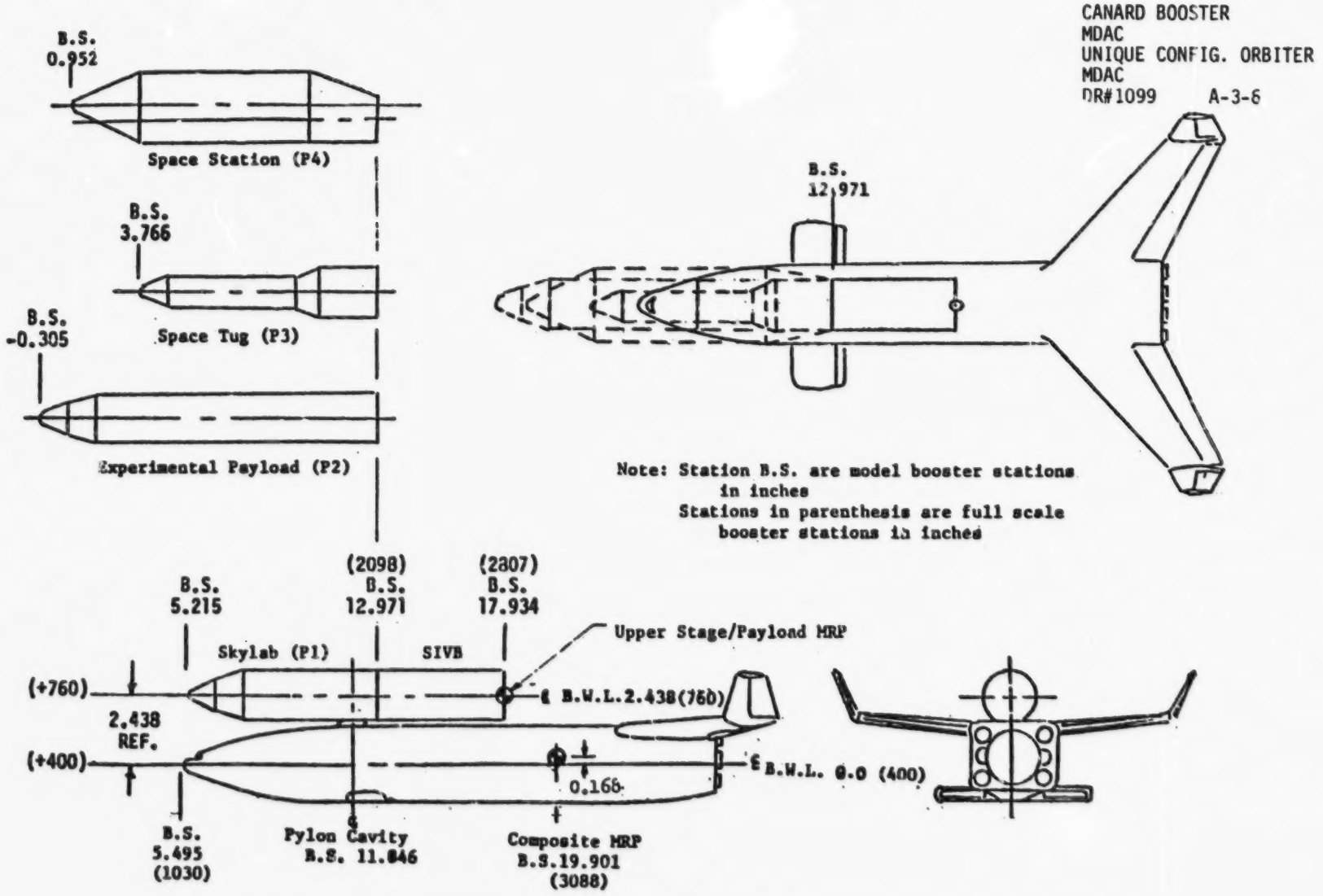

Figure B.- General Arrangement of Booster with Expendable Second Stage Plus Various Payloads

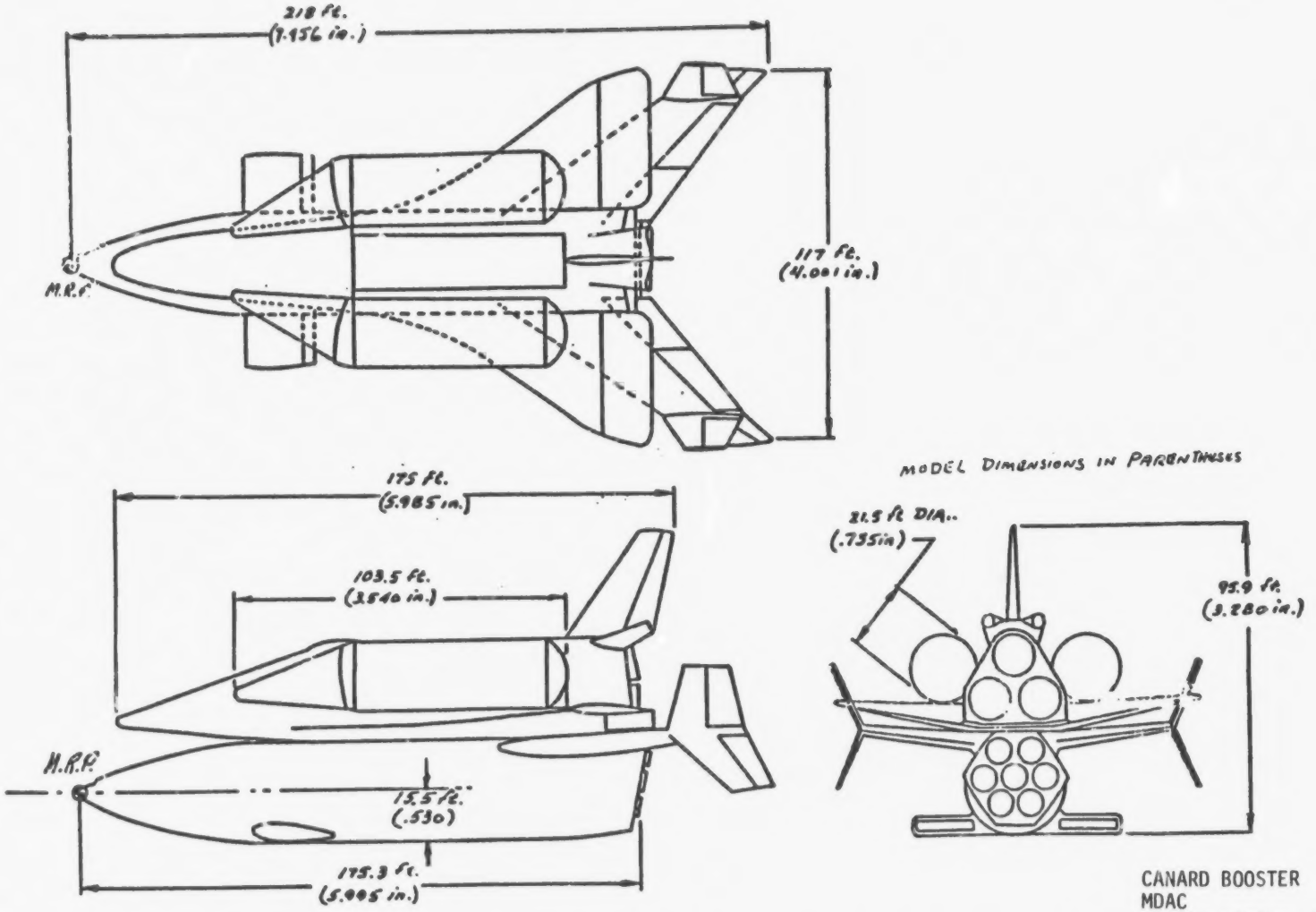

CANARD BOOSTER
MDAC
UNIQUE CONFIG. ORBITER
MDAC
DR#1166 A-3-7

Figure 3: Launch Configuration Model Geometry (L.)

CYLINDRICAL BOOSTER
GD/C
DELTA WING ORBITER
MSC
DR#1204 A-3-8

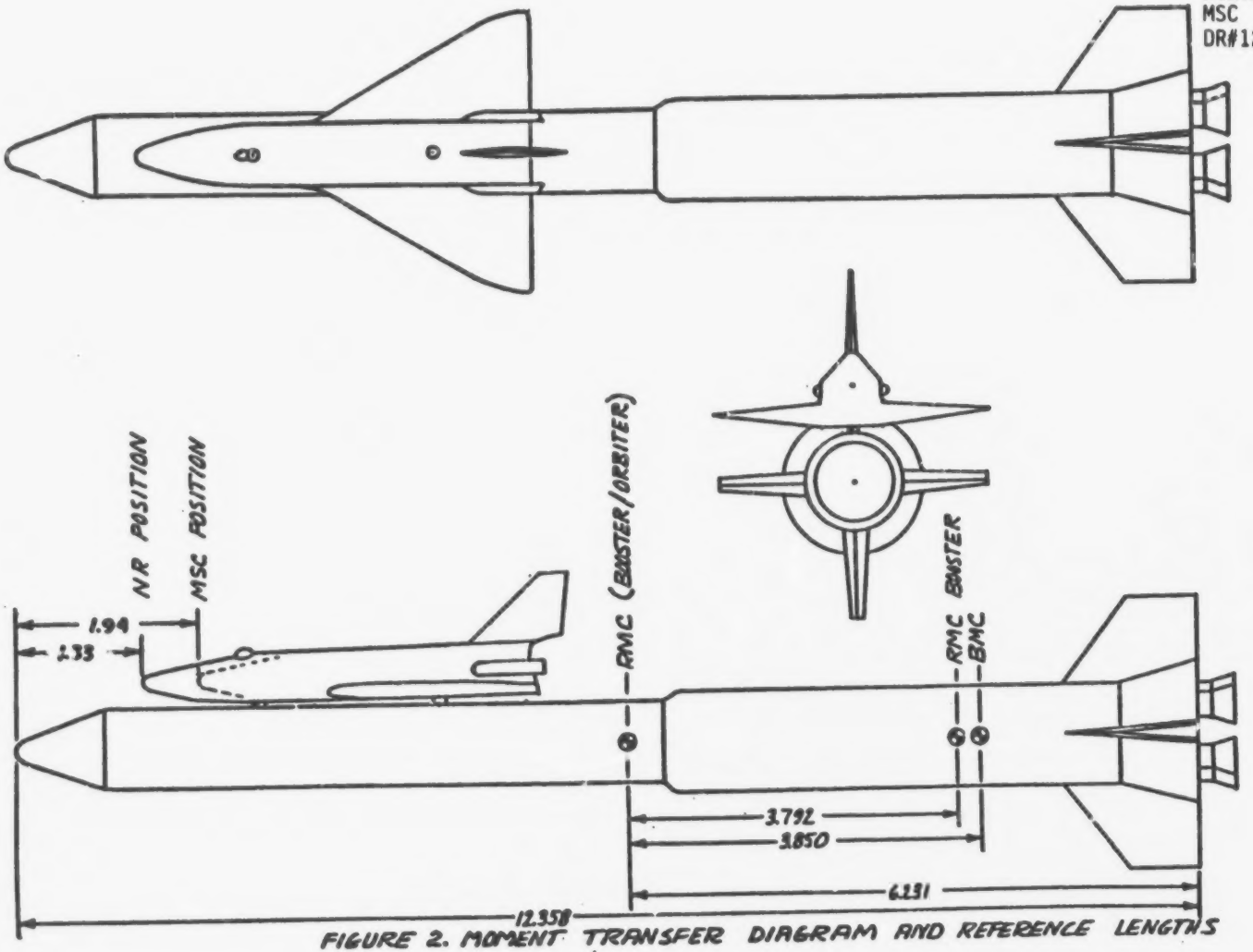

FIGURE 2. MOMENT TRANSFER DIAGRAM AND REFERENCE LENGTHS

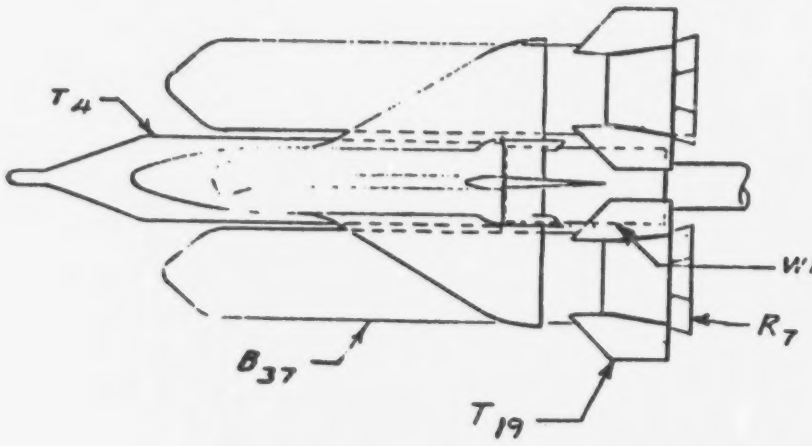

COMPLETE CONFIG. = $B_{37} R_7 T_{19} O_2 T_4$
OR
$B_{37} R_7 T_{19} O_5 T_4$

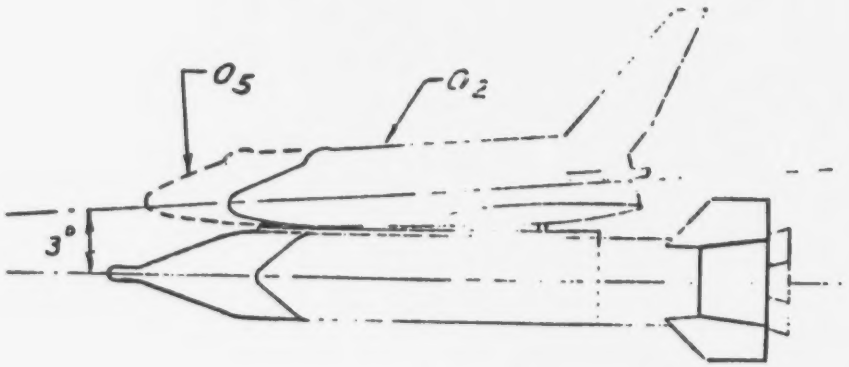

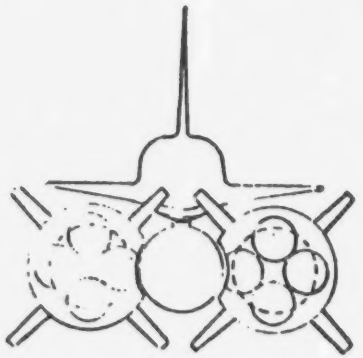

FIG 4. LAUNCH PHASE CONFIGURATION 040A ORBITER AND TWIN PRESSURE FED BOOSTERS

CYLINDRICAL BOOSTER
GDC
DELTA WING ORBITER
MSC
DR#1210 A-3-9

CYLINDRICAL BOOSTER
MDAC
DELTA WING ORBITER
MSC
DR#1230-1 A-3-10

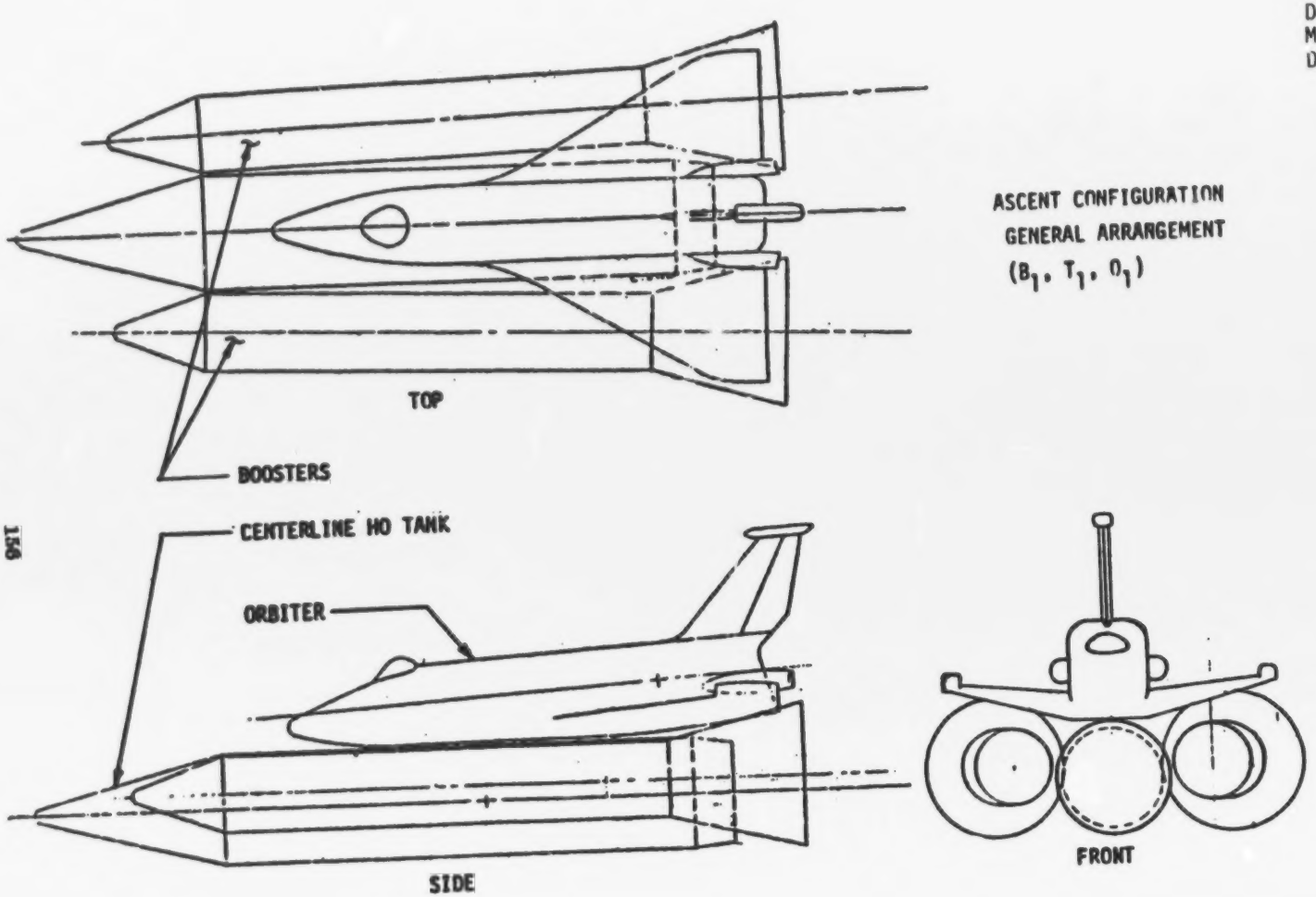

ASCENT CONFIGURATION
GENERAL ARRANGEMENT
(B_1, T_1, O_1)

Figure 4. General Arrangement-Ascent Configuration $O_1T_1B_1$

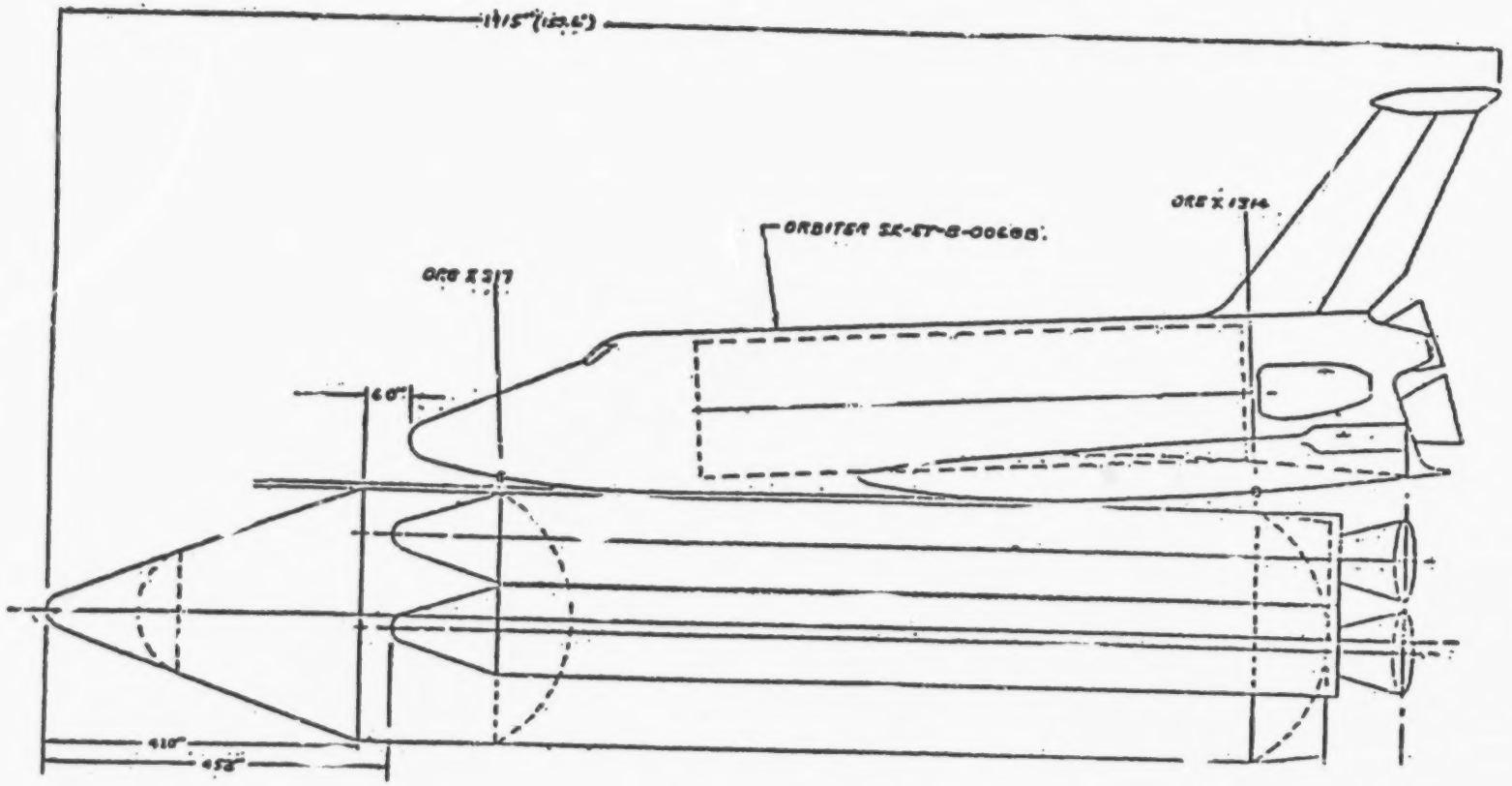

Figure 9. General Arrangement-Ascent Configuration
01T4B7-4 (Side View)

CYLINDRICAL BOOSTER
MDAC
DELTA WING ORBITER
MSC
DR#1230-2 A-3-11

CYLINDRICAL BOOSTER
MDAC
DELTA WING ORBITER
MSC
DR#1230-3 A-3-12

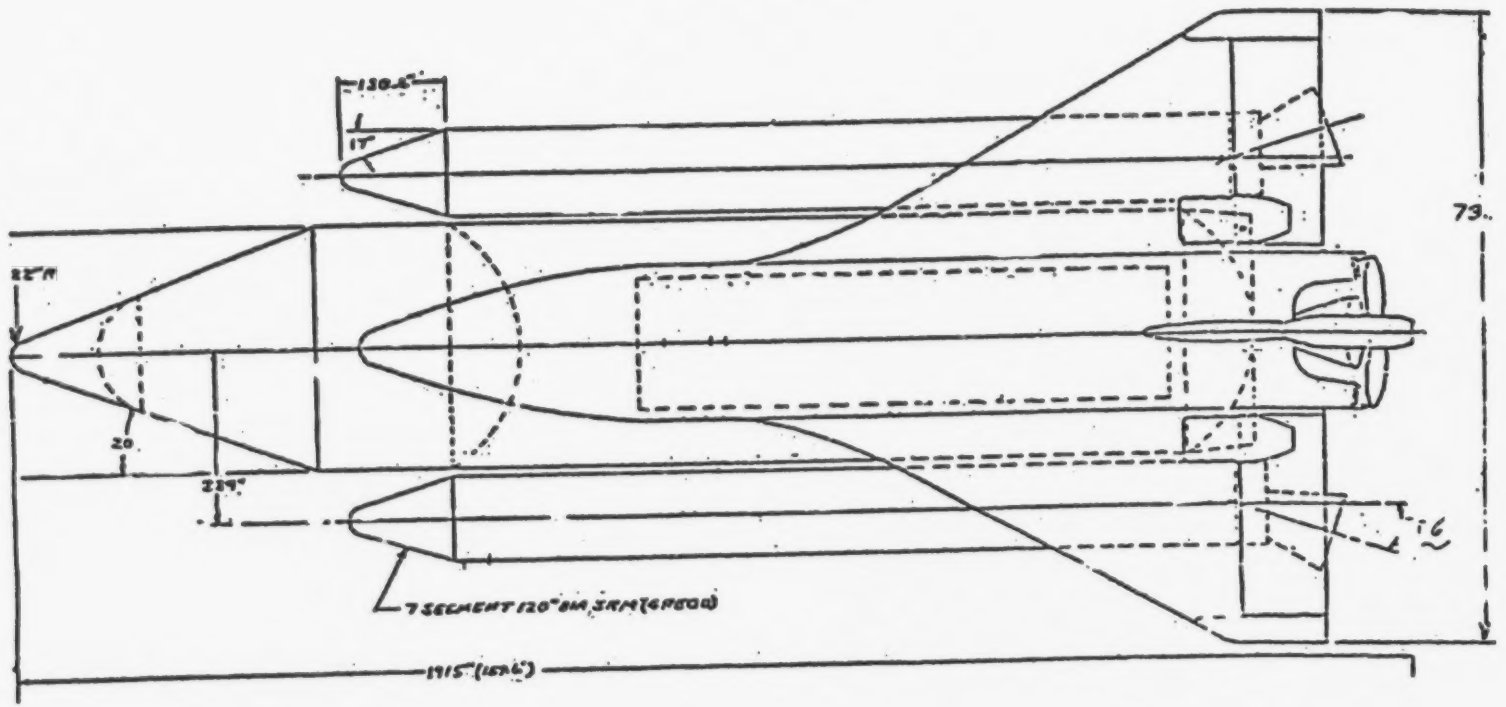

Figure 10. General Arrangement-Ascent Configuration
01T4B7-4 (Top View)

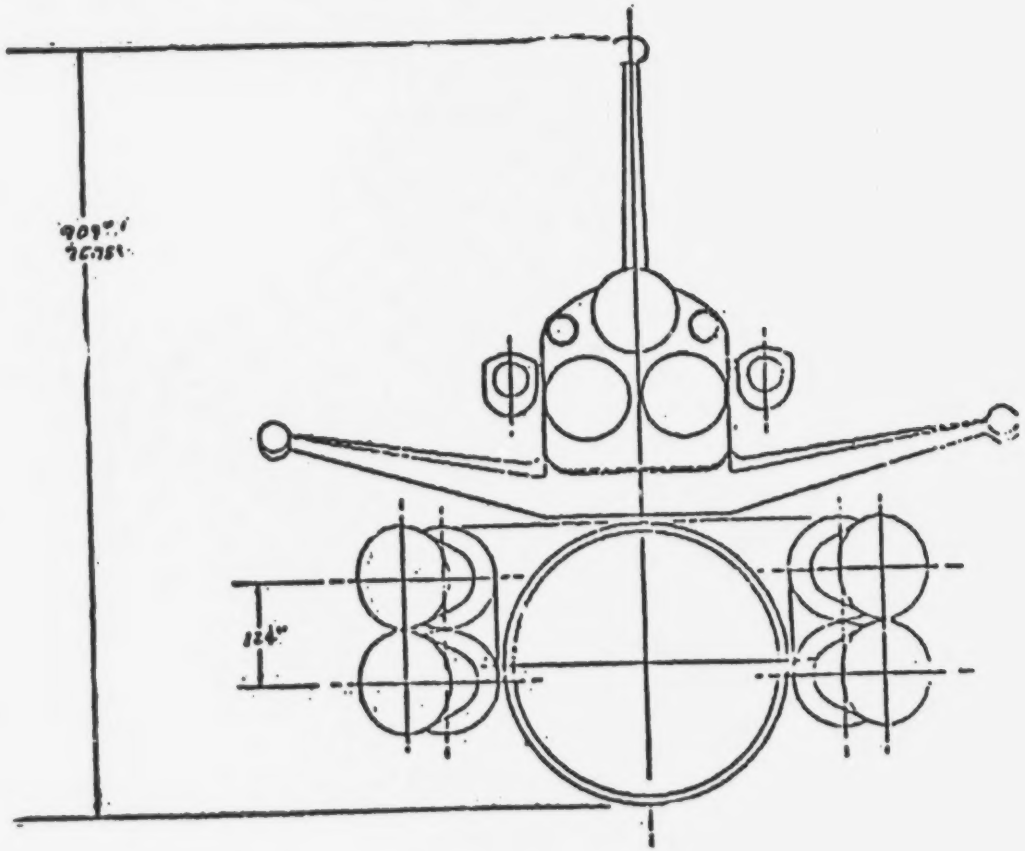

Figure 11. General Arrangement-Ascent Configuration 01T4B7-4
(Rear View)

CYLINDRICAL BOOSTER
MDAC
DELTA WING ORBITER
MSC
DR#1230-4 A-3-13

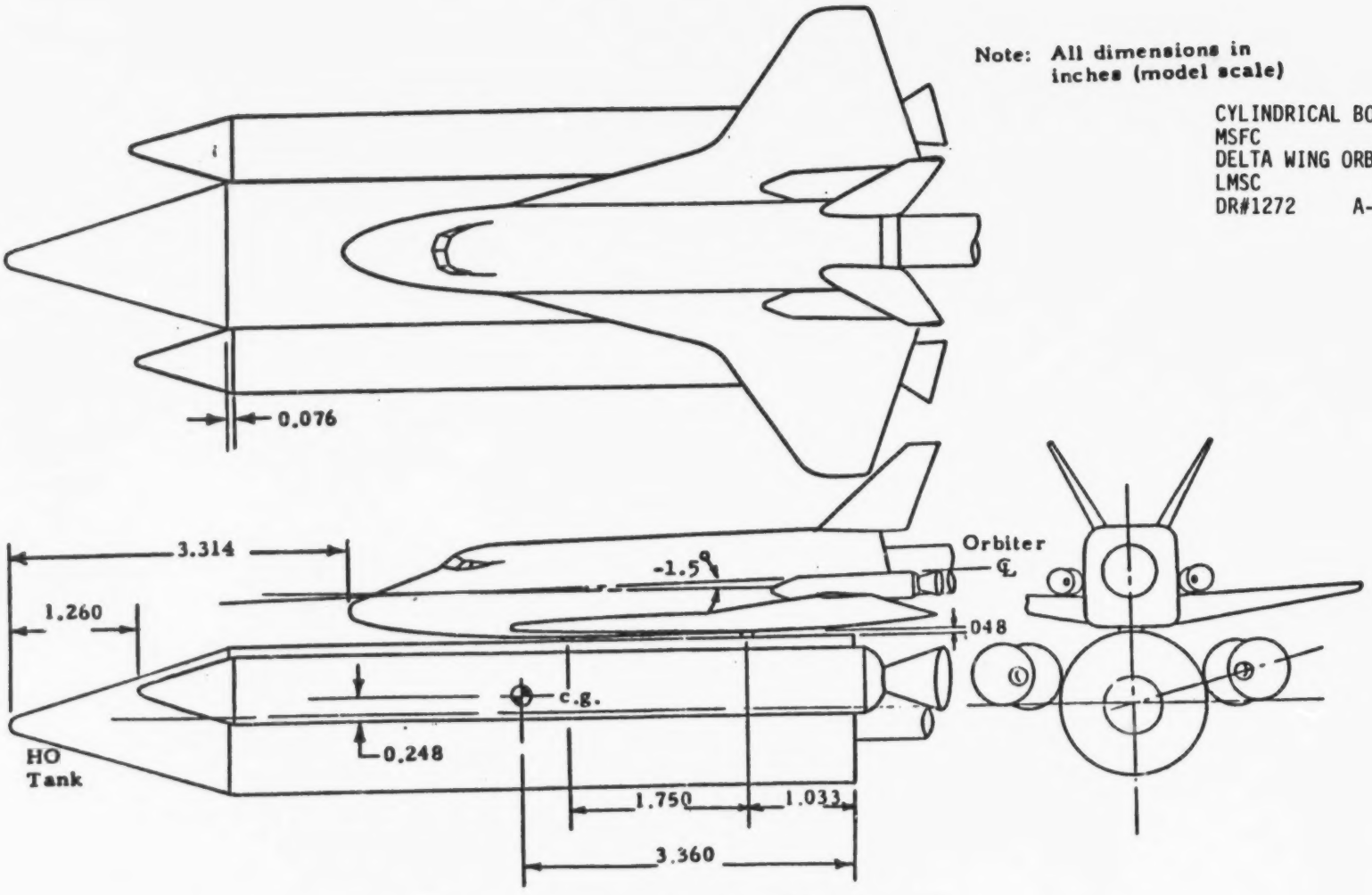

Figure 2 - Launch Vehicle T3 346 Inch HO Tank

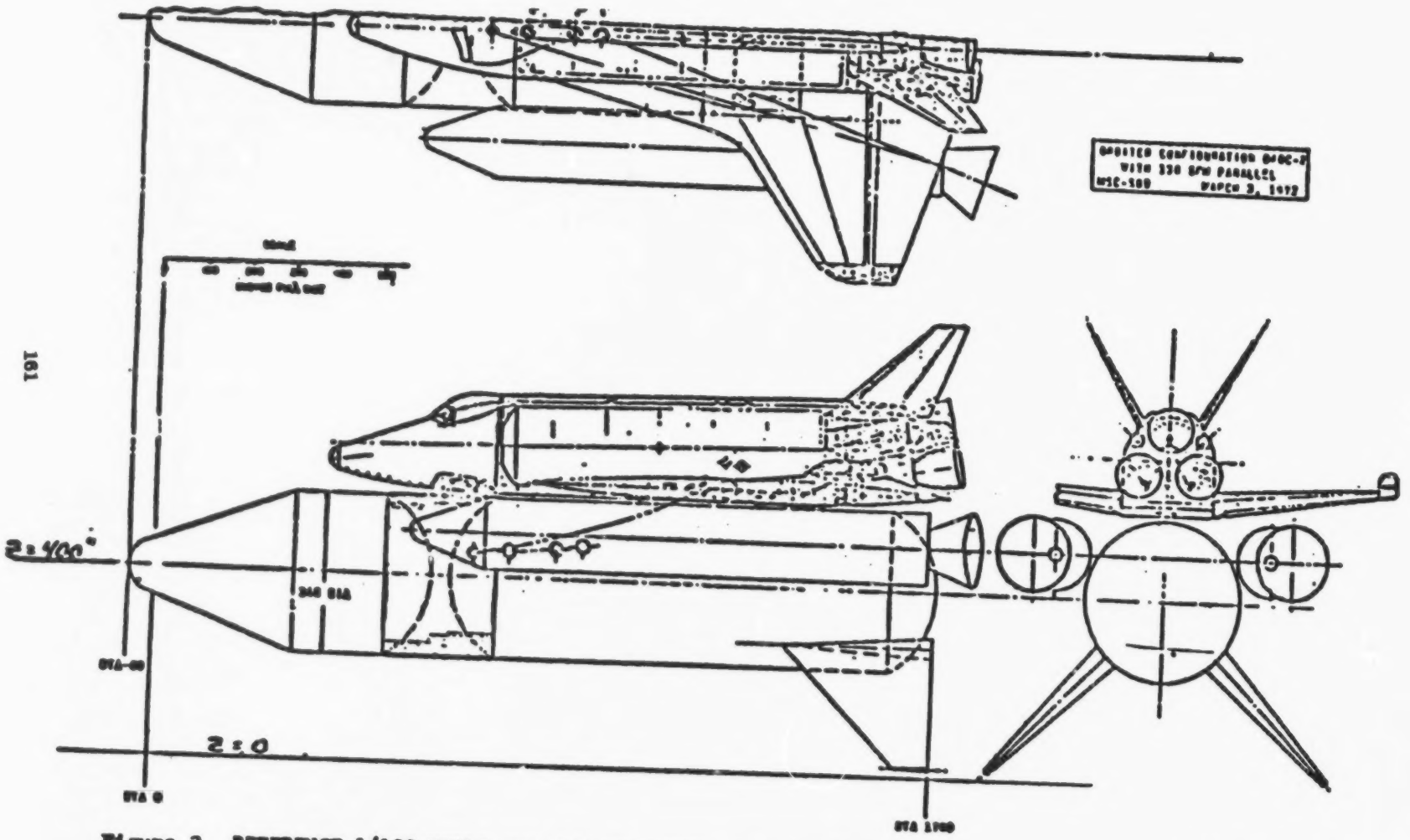

Figure 3 REFERENCE 1/100 SCALE DWG MSC-SDD DATED 3 MARCH 1972
(SRM Parallel Burn Launch Configuration)

CYLINDRICAL BOOSTER
MSFC
DELTA WING ORBITER
MSC
DR#1249 A-3-15

CYLINDRICAL BOOSTER
MSFC
DELTA WING ORBITER
MSC
DR#1251 A-3-16

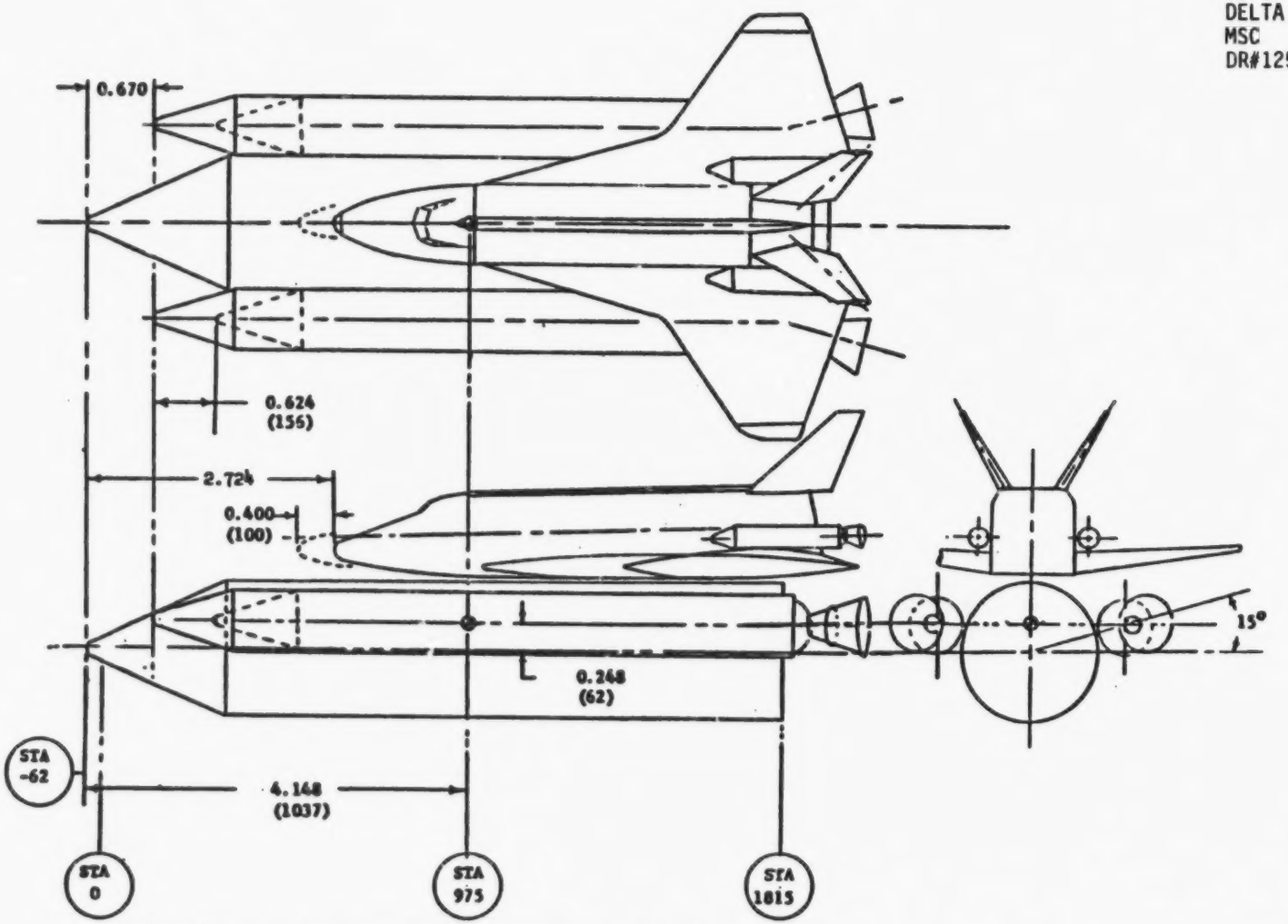

FIGURE 4. MOMENT REFERENCE CENTER AND LOCATIONS OF 01, 02, S1, S3

CYLINDRICAL BOOSTER
MSFC
DELTA WING ORBITER
MSC
DR#1267 A-3-17

Location of center of nozzel exit plane from tank nose and ℄			
	x	y	z
Orb. top	39.113	0	7.440
Orb. bot.	40.128	±1.90	5.662
SRM	42.114	±5.403	1.172

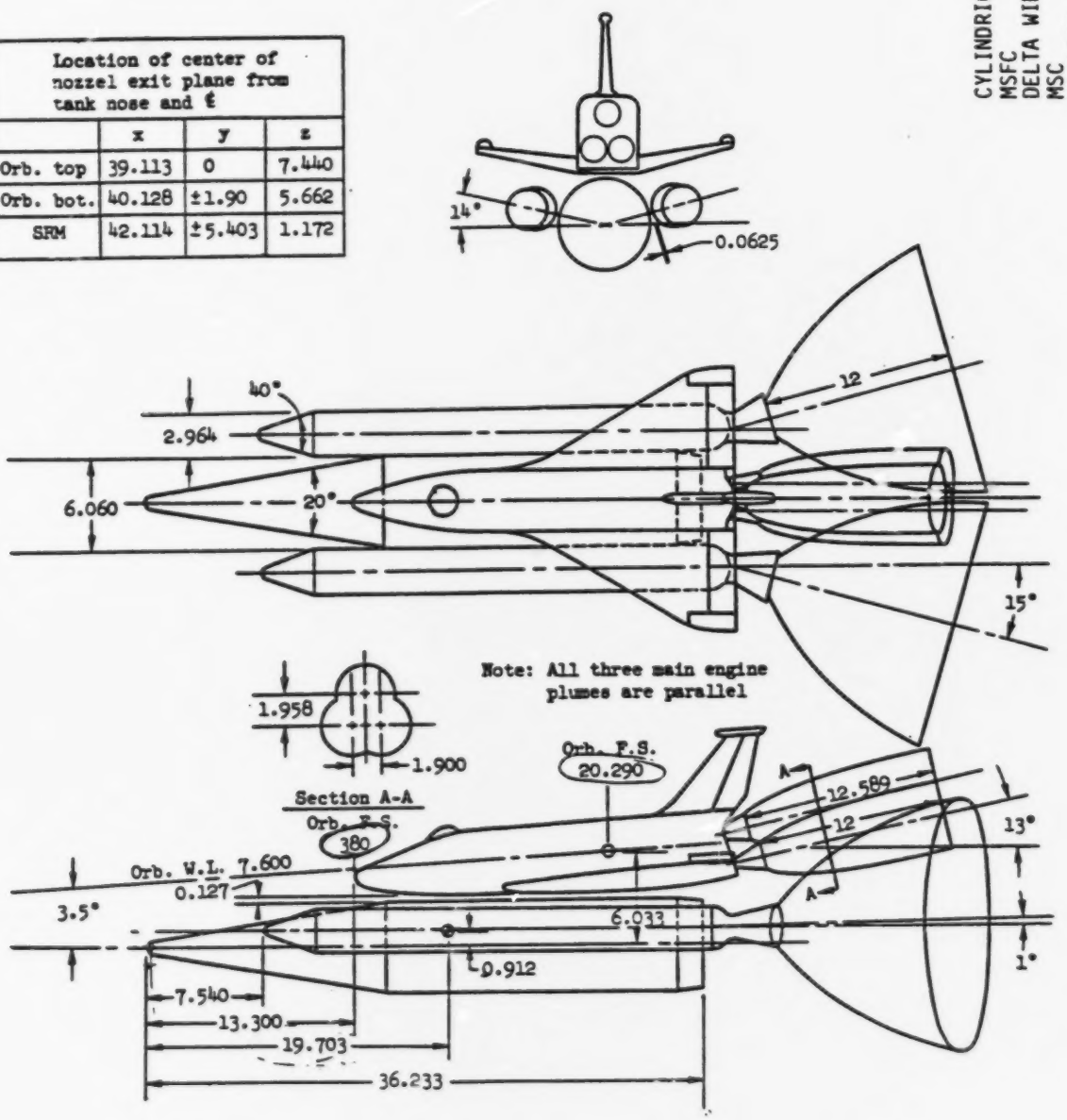

(a) General arrangement

Figure 2.- Model description.

Note: All dimensions are model scale in inches.

CYLINDRICAL BOOSTER
NR
DELTA WING ORBITER
NR
DR#1185 A-3-18

SSV CONFIG. $B_{12}W_{26}E_{16}V_{36}+T_2$

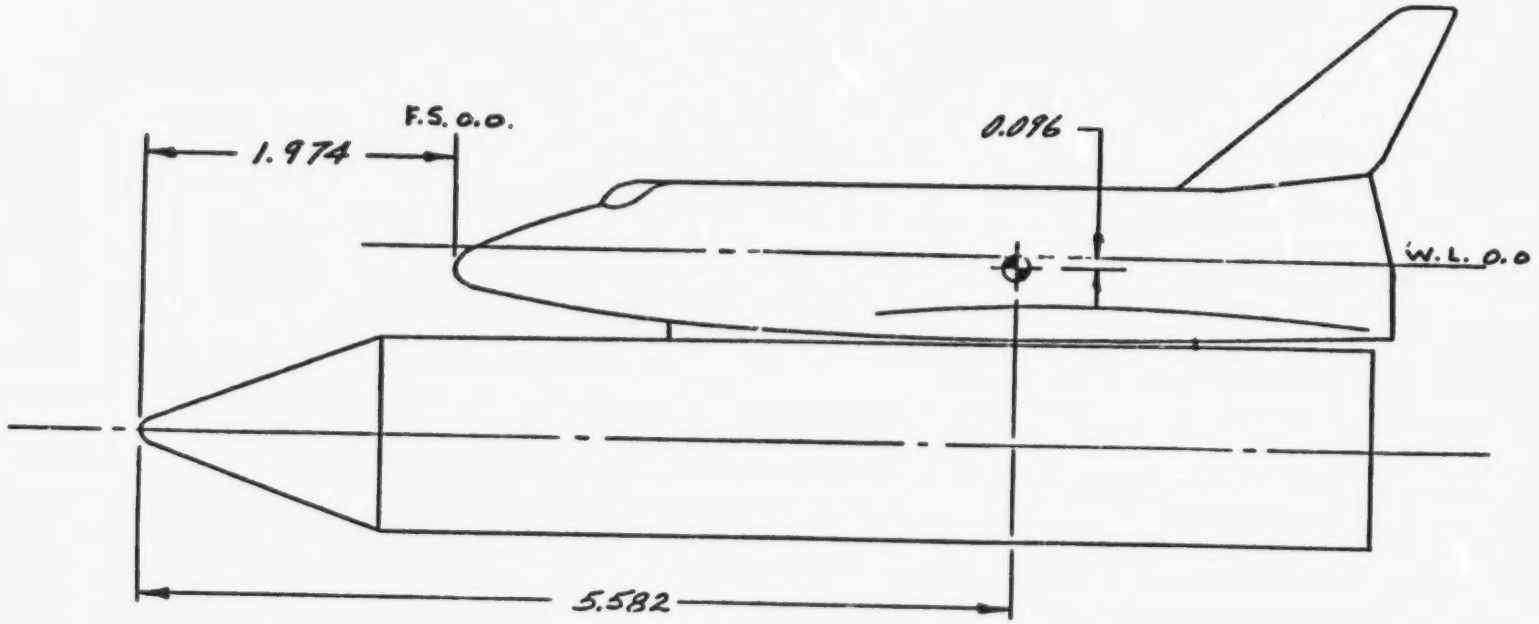

FIGURE D. LOCATION OF MOMENT REFERENCE POINT (Continued)
4) Configuration $B_{12}W_{26}E_{16}V_{36}+T_2$

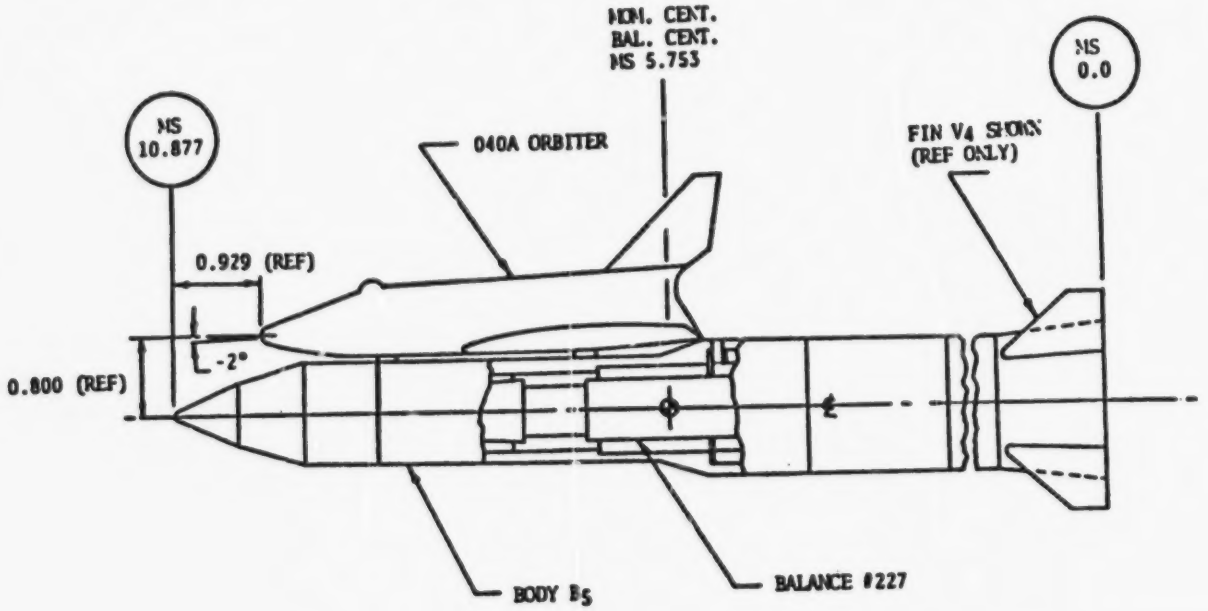

S = 5.1478 sq.in. (3155.3 sq.ft.)
ℓ_{LONG} = 4.426 in. (109.58 ft)
b_{LAT} = 2.969 in. (73.5 ft)

FIGURE 2 - PRESSURE FED BOOSTER/040A ORBITER
0.003366 SCALE AX 1233 MODEL

CYLINDRICAL BOOSTER
TBC
DELTA WING ORBITER
MSC
DR#1227 A-3-19

CYLINDRICAL BOOSTER
MSFC
UNIQUE CONFIG. ORBITER
GAC
DR#1181-1 A-3-20

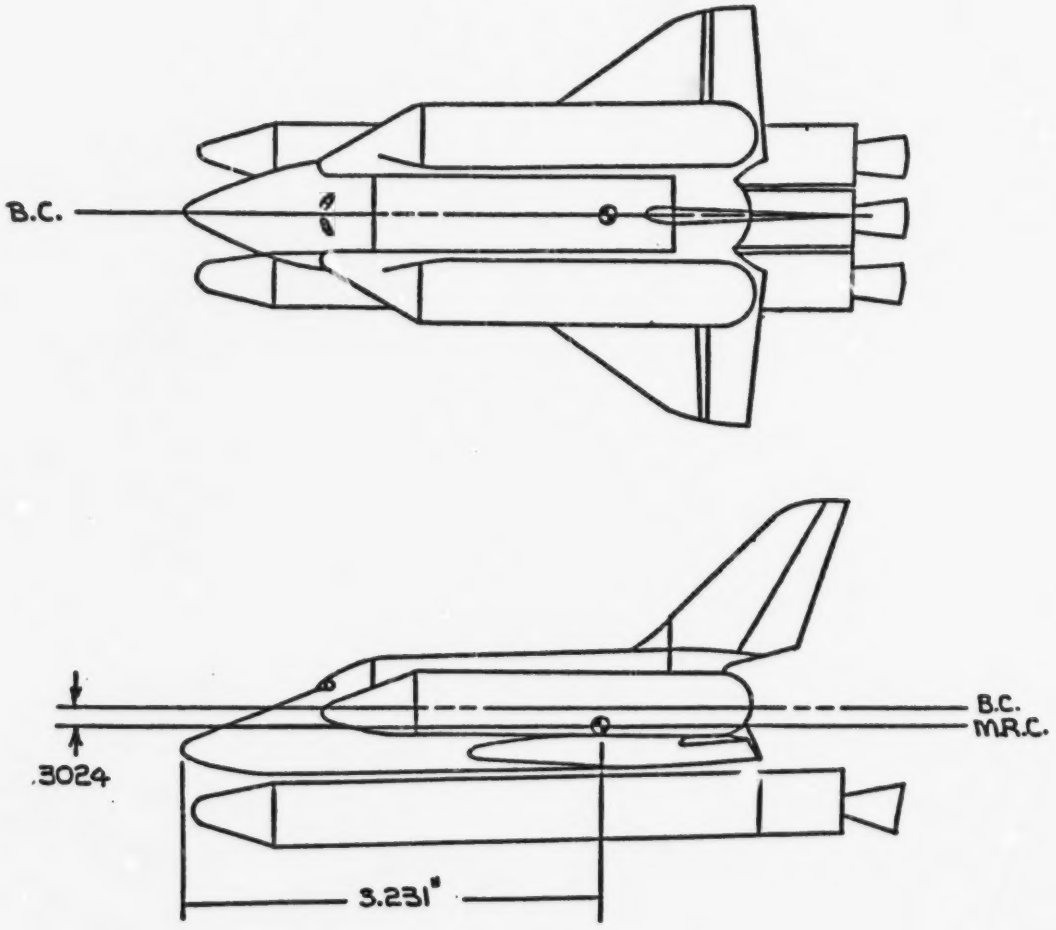

Figure 6. Side and Planview Sketch of the Grumman H-33 Orbiter With Drop Tanks and Three Solid Propellant Booster Motors Installed

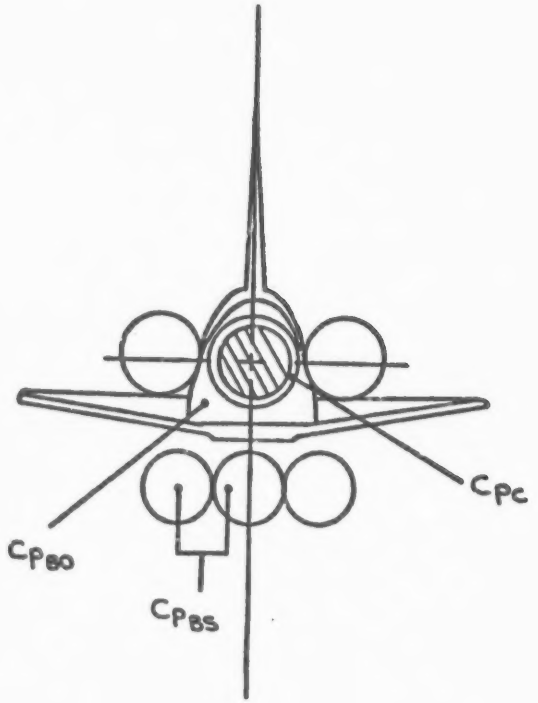

Figure 7. Base Pressure Measurements

CYLINDRICAL BOOSTER
MSFC
UNIQUE CONFIG. ROBITER
GAC
DR#1181-2 A-3-21

DELTA WING BOOSTER
GD/C
DELTA WING ORBITER
NR
DR#1237 A-3-22

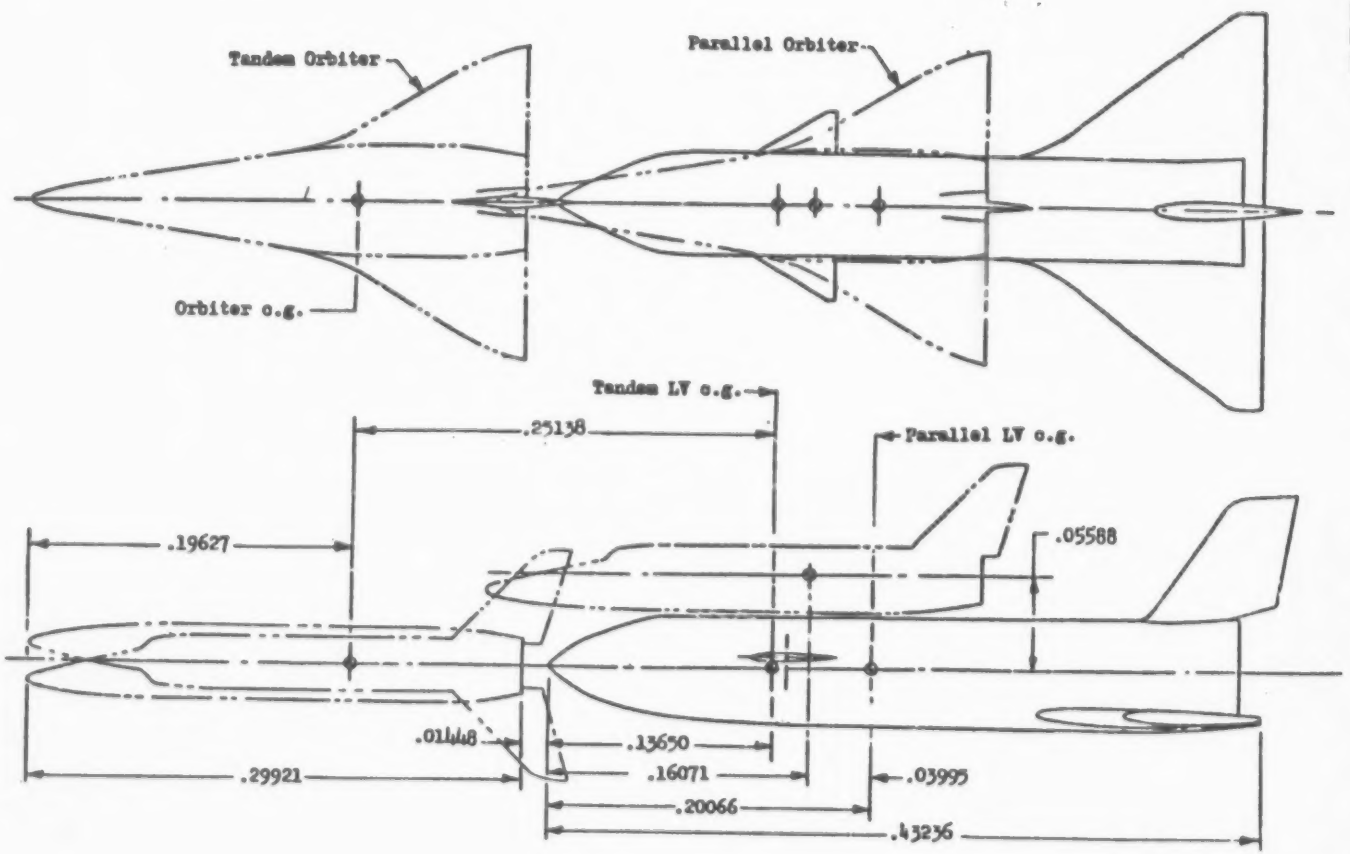

Figure 4.- Tandem and parallel launch configurations. All dimensions are given in meters.

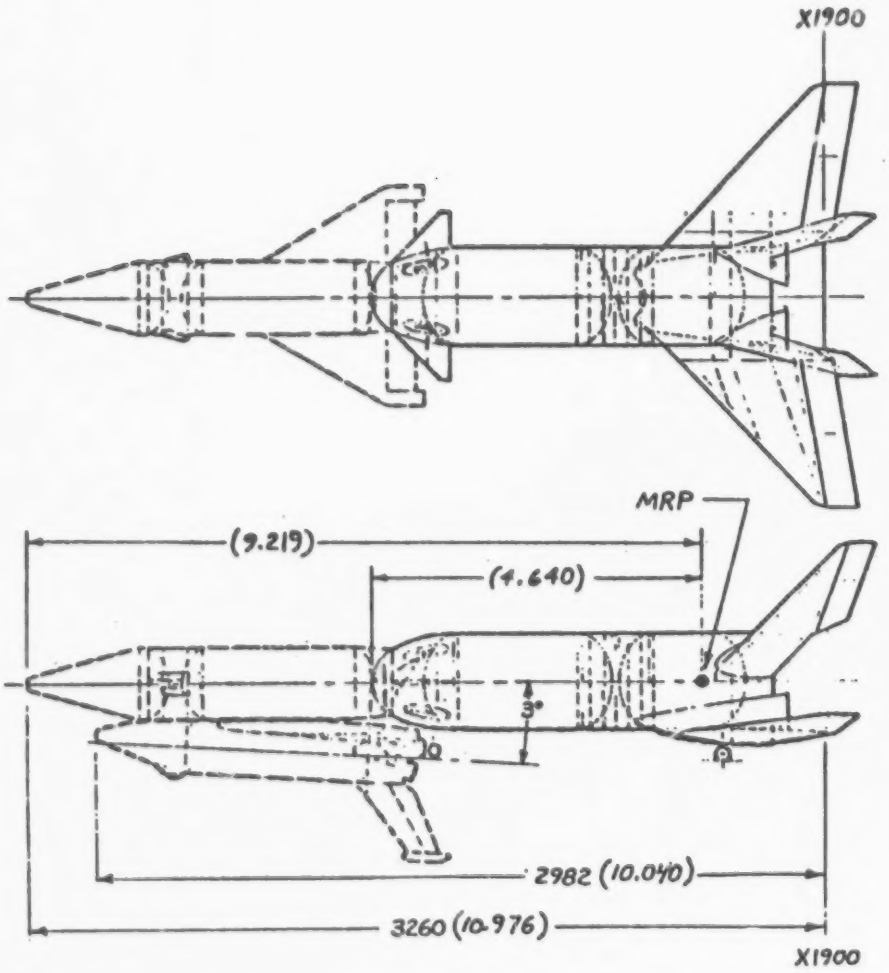

NOTE: 1. Dimensions are in inches
2. Model values are shown i
parenthesis

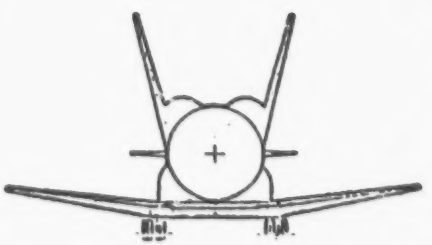

FIGURE 3. LAUNCH CONFIGURATION, L1 O1 D1, GENERAL ARRANGEMENT

DELTA WING BOOSTER
MMC
DELTA WING ORBITER
MSC
DR#1213 A-3-23

DELTA WING BOOSTER
MSC/MDAC
DELTA WING ORBITER
MSC/MDAC
DR#1038 A-3-24

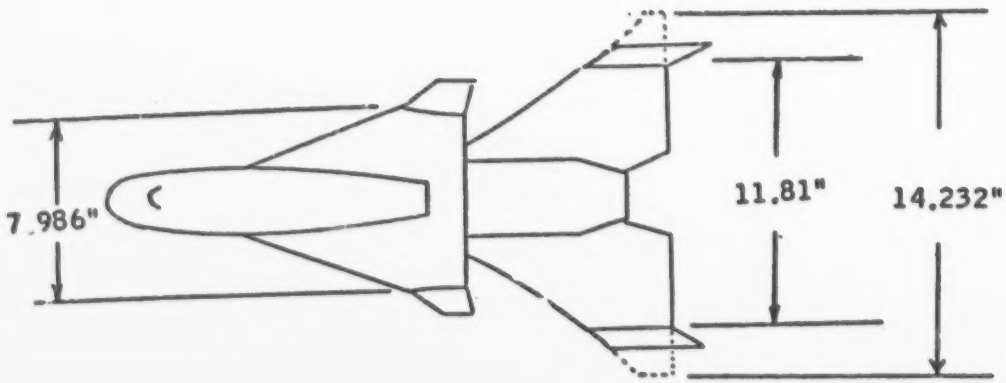

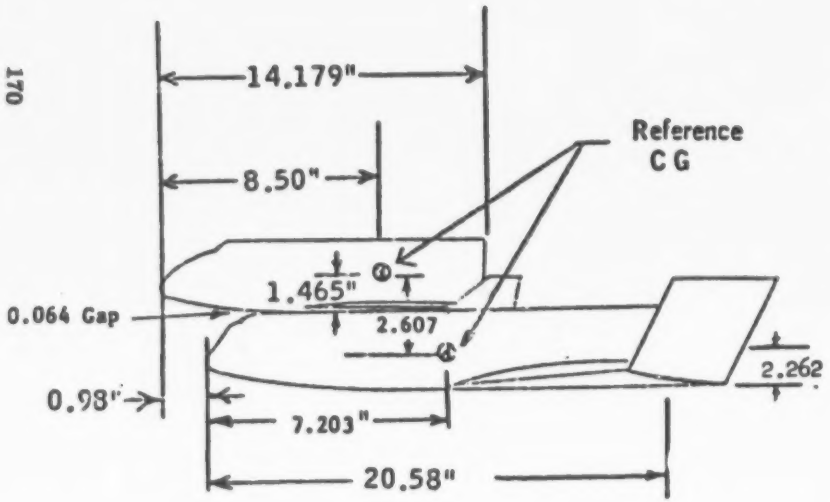

REFERENCE LENGTHS AND AREA

	ORBITER	BOOSTER and LAUNCH CONFIGURATION
S	60.925 in^2	101.3 in^2
b	7.986 in	14.232 in
$\overline{c}$	8.964 in	8.248 in

CG LOCATIONS

	XRP	ZRP
ORBITER	8.50 in.	1.465 in.
BOOSTER	12.34	1.675 in.
COMPOSITE	7.203 in.	2.262 in.

Aerodynamic data on the delta wing booster was reduced using a theoretical (non-clipped) delta wing.

a) Delta Wing Orbiter Mated to the Delta Wing Booster

Figure 6. - Delta Wing Booster Launch Configuration

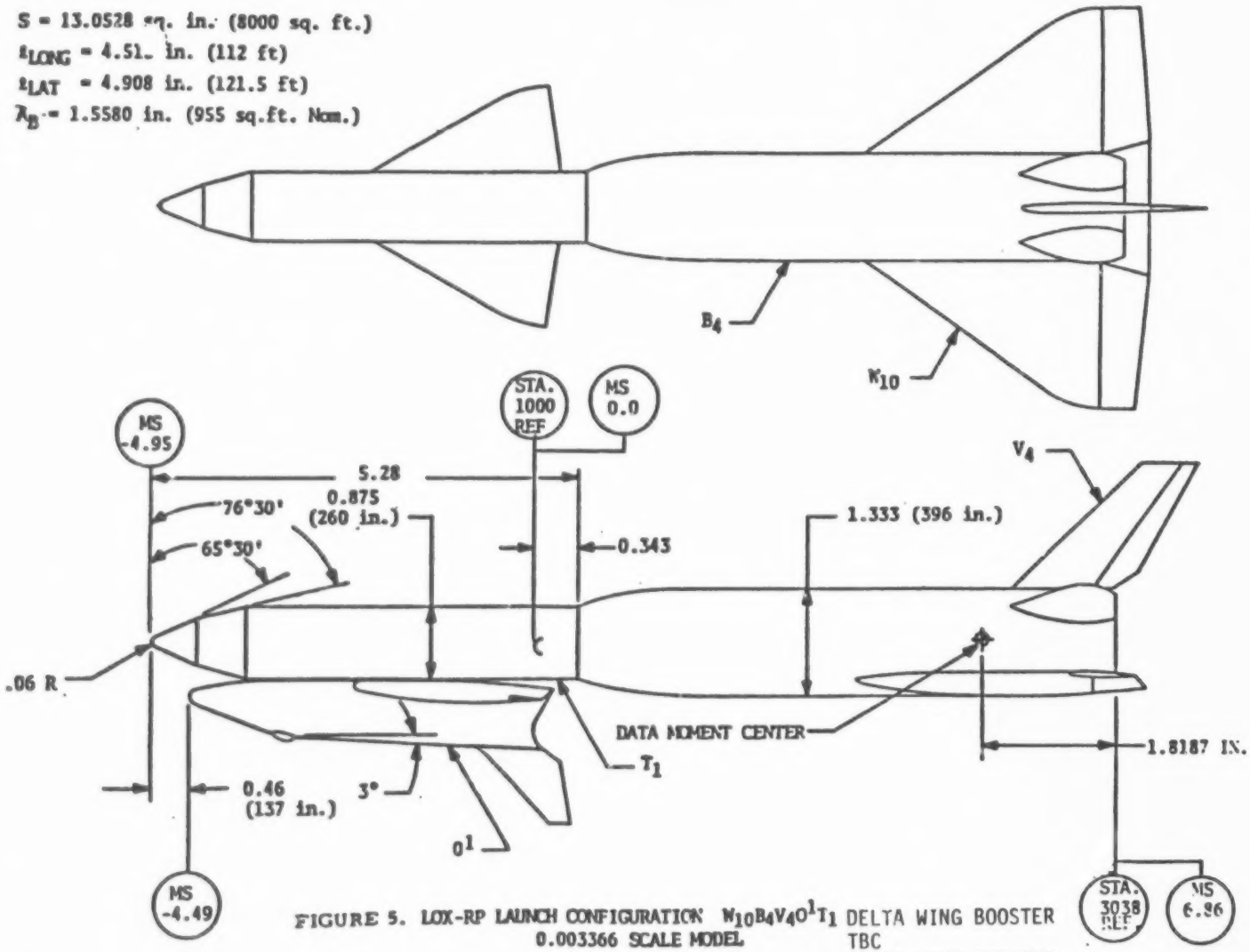

FIGURE 5. LOX-RP LAUNCH CONFIGURATION $W_{10}B_4V_4O^1T_1$ DELTA WING BOOSTER
0.003366 SCALE MODEL TBC
DELTA WING ORBITER
MSC
DR#1183-1 A-3-25

DELTA WING BOOSTER
TBC
DELTA WING ORBITER
MSC
DR#1183-2 A-3-26

S = 13.0528 sq. in. (8000 sq. ft.)
ℓ_{LONG} = 4.515 in. (112 ft)
ℓ_{LAT} = 4.908 in. (121.5 ft)
A_B = 1.5580 in. (955 sq. ft. Nom.)

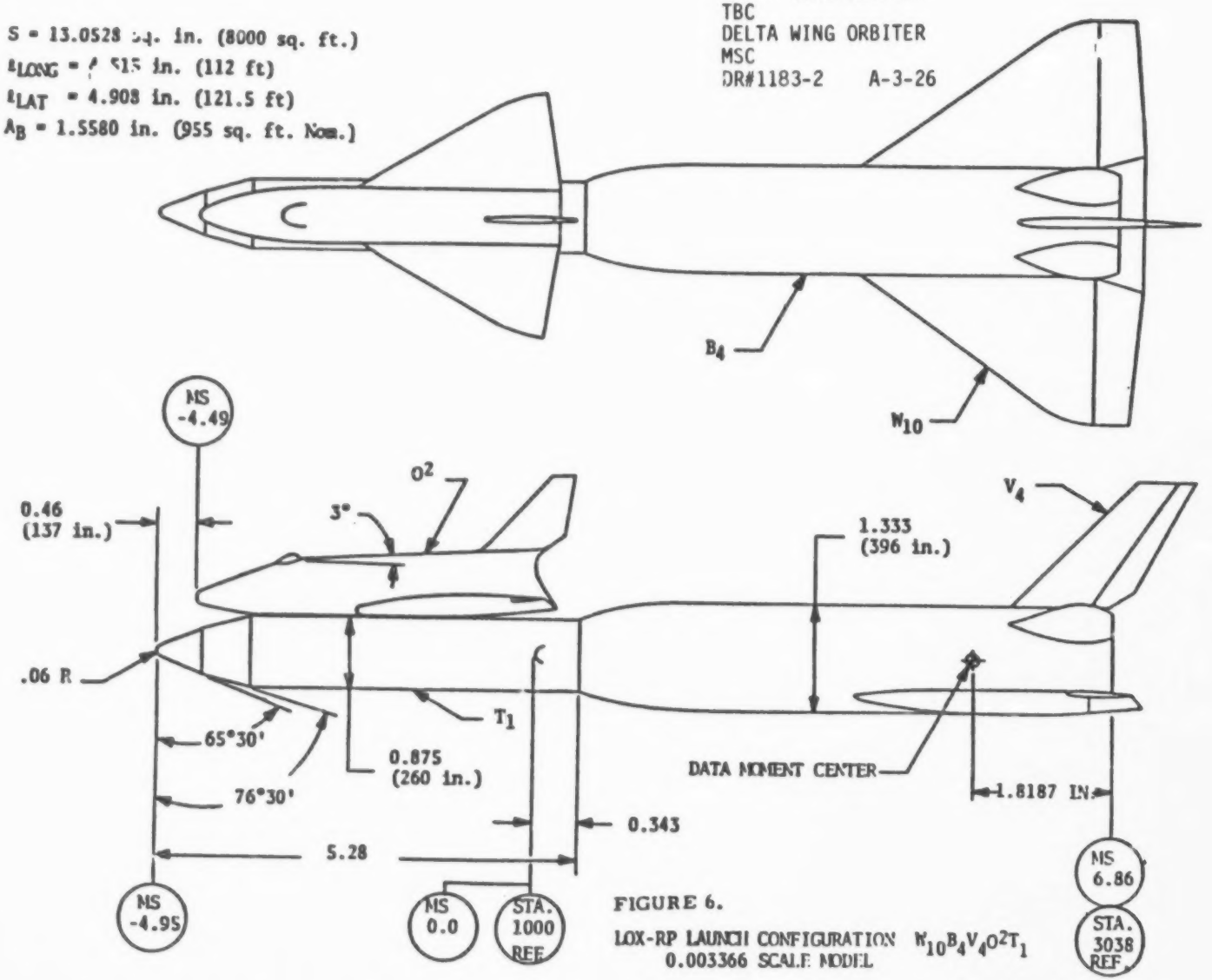

FIGURE 6.

LOX-RP LAUNCH CONFIGURATION $W_{10}B_4V_4O^2T_1$
0.003366 SCALE MODEL

Axial location	X, cm.	Gap setting	cm.
L1	-5.08	G1	0.19
L2	8.89	G1	0.19
L3	15.24	G1	0.19
L2	8.89	G2	0.69
L0	Orbiter removed		

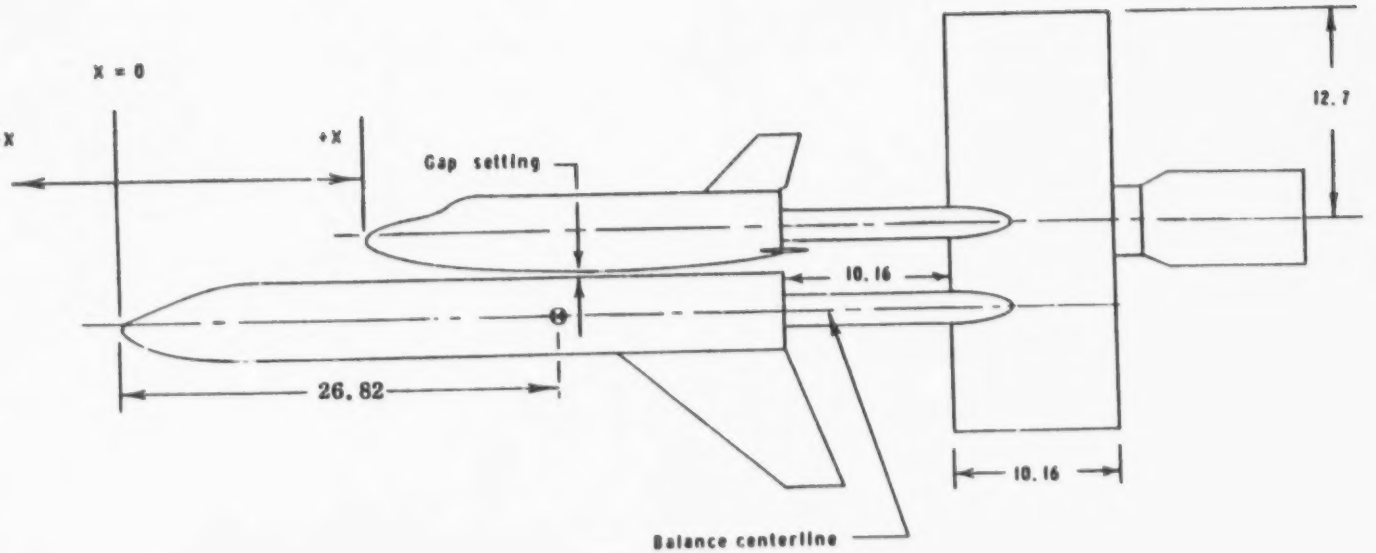

Wings omitted for clarity

Orbiter shown here in axial location L3

FIGURE 5. Sketch of booster - orbiter arrangement. All dimensions in centimeters.

DELTA WING BOOSTER
MDAC
STRAIGHT WING ORBITER
MSC
DR#1061 A-3-27

DELTA WING BOOSTER
MSC/MDAC
STRAIGHT WING ORBITER
MSC/MDAC
DR#1038 A-3-28

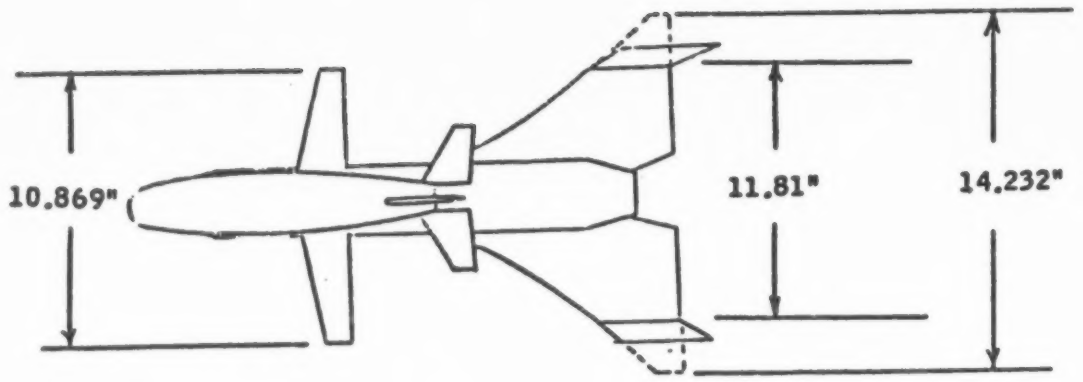

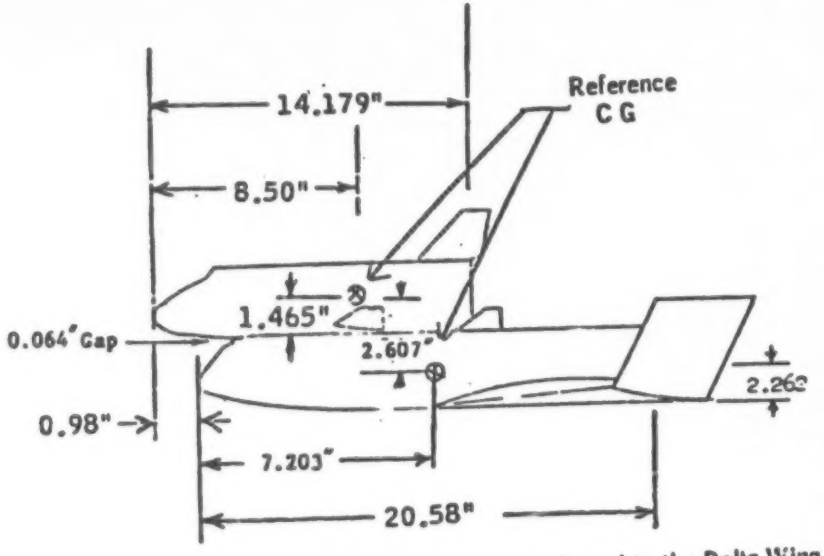

REFERENCE LENGTHS AND AREA

	ORBITER	BOOSTER and LAUNCH CONFIGURATION
S	16.956 in^2	101.3 in^2
b	10.869 in	14.232 in
$\bar{c}$	1.679 in	8.248 in

CG LOCATIONS

	XCRP	ZCRP
ORBITER	8.50 in.	1.465 in.
BOOSTER	12.34	1.875 in.
COMPOSITE	7.203 in.	2.262 in.

Aerodynamic data on the delta wing booster was reduced using a theoretical (non-clipped) delta wing.

b) Straight Wing Orbiter Mated to the Delta Wing Booster

Figure 6. - Concluded.

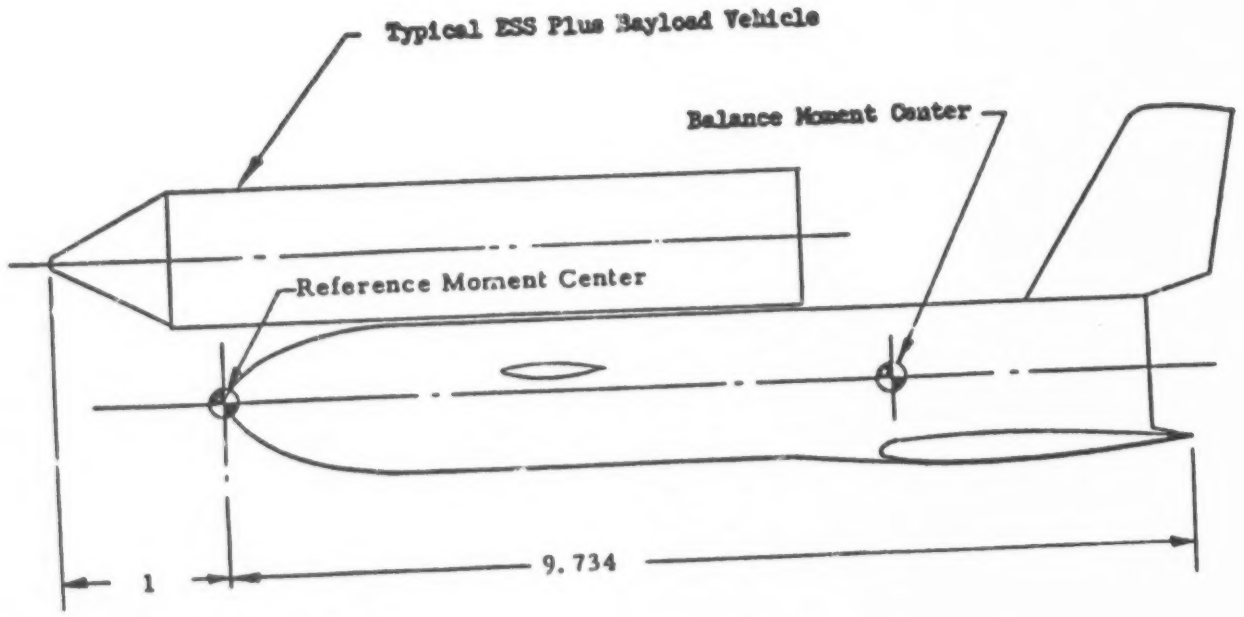

1 for U = 1.717
U2 = 3.980
U3 = 1.355

FIGURE 13. MOMENT REFERENCE CENTER LOCATION

DELTA WING BOOSTER
GD/C
UNIQUE CONFIG. ORBITER
NR
DR#1119 A-3-29

DELTA WING BOOSTER
TBC
UNIQUE CONFIG. ORBITER
MSC
DR#1183-1 A-3-30

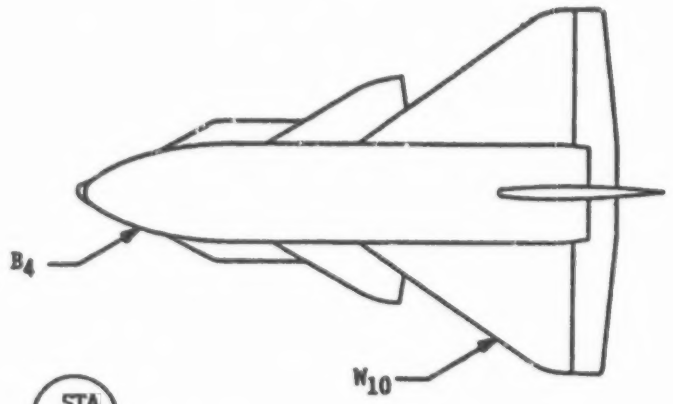

S = 13.0528 sq. in. (8000 sq. ft.)
ℓ_{LONG} = 4.515 in. (112 ft)
ℓ_{LAT} = 4.908 in. (121.5 ft)
A_B = 1.5580 in. (955 sq. ft. Nom.)

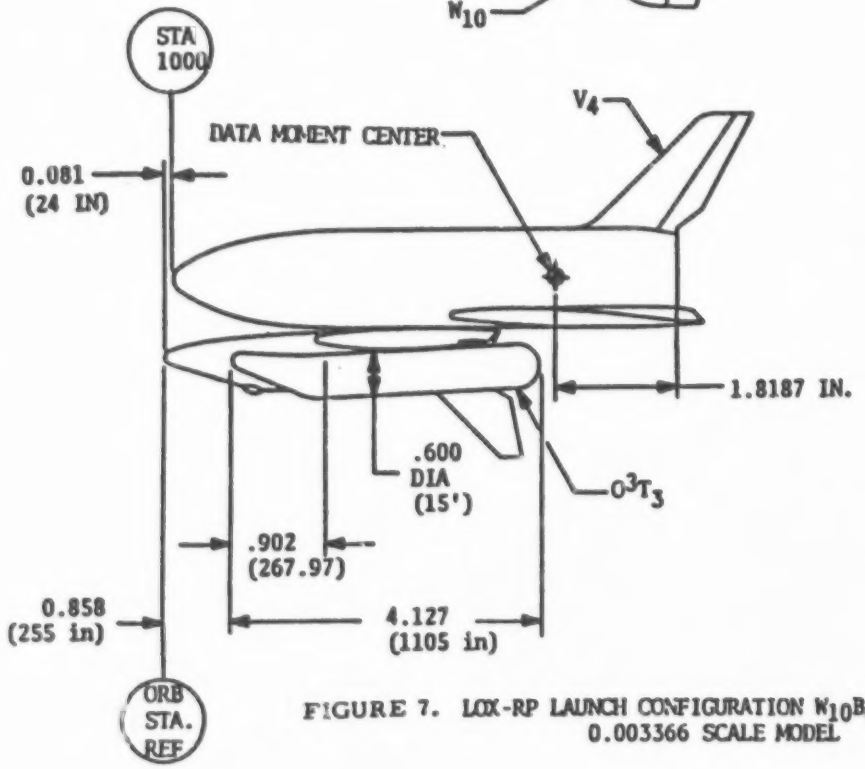

FIGURE 7. LOX-RP LAUNCH CONFIGURATION $W_{10}B_4V_4O^3T_3$
0.003366 SCALE MODEL

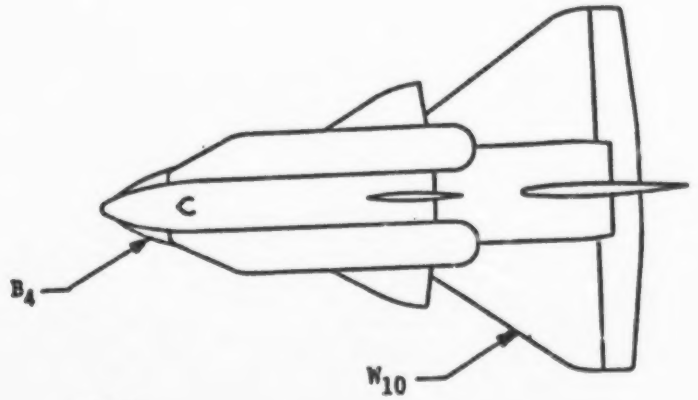

S = 13.0528 sq. in. (8000 sq. ft.)
ℓ_{LONG} = 4.515 in. (112 ft)
ℓ_{LAT} = 4.908 in. (121.5 ft)
A_B = 1.5580 in. (955 sq. ft. Nom.)

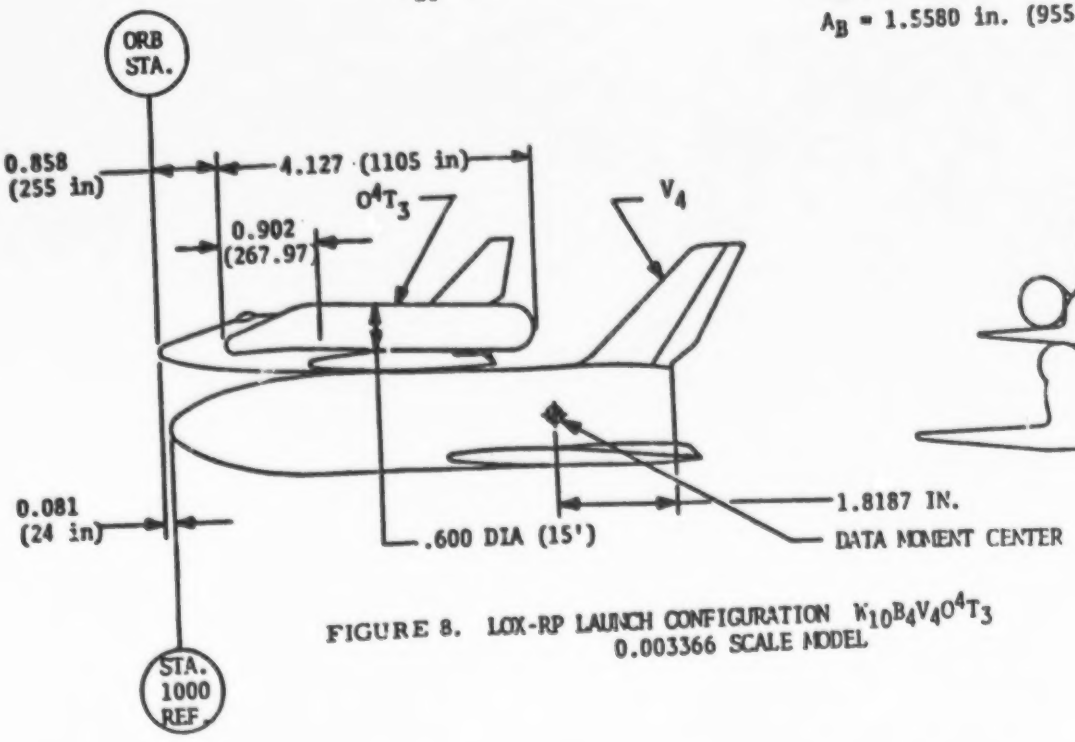

FIGURE 8. LOX-RP LAUNCH CONFIGURATION $W_{10}B_4V_4O^4T_3$
0.003366 SCALE MODEL

DELTA WING BOOSTER
TBC
UNIQUE CONFIG. ORBITER
MSC
DR#1183-2 A-3-31

STRAIGHT WING BOOSTER
GD/C
DELTA WING ORBITER
NR
DR#1075 A-3-32

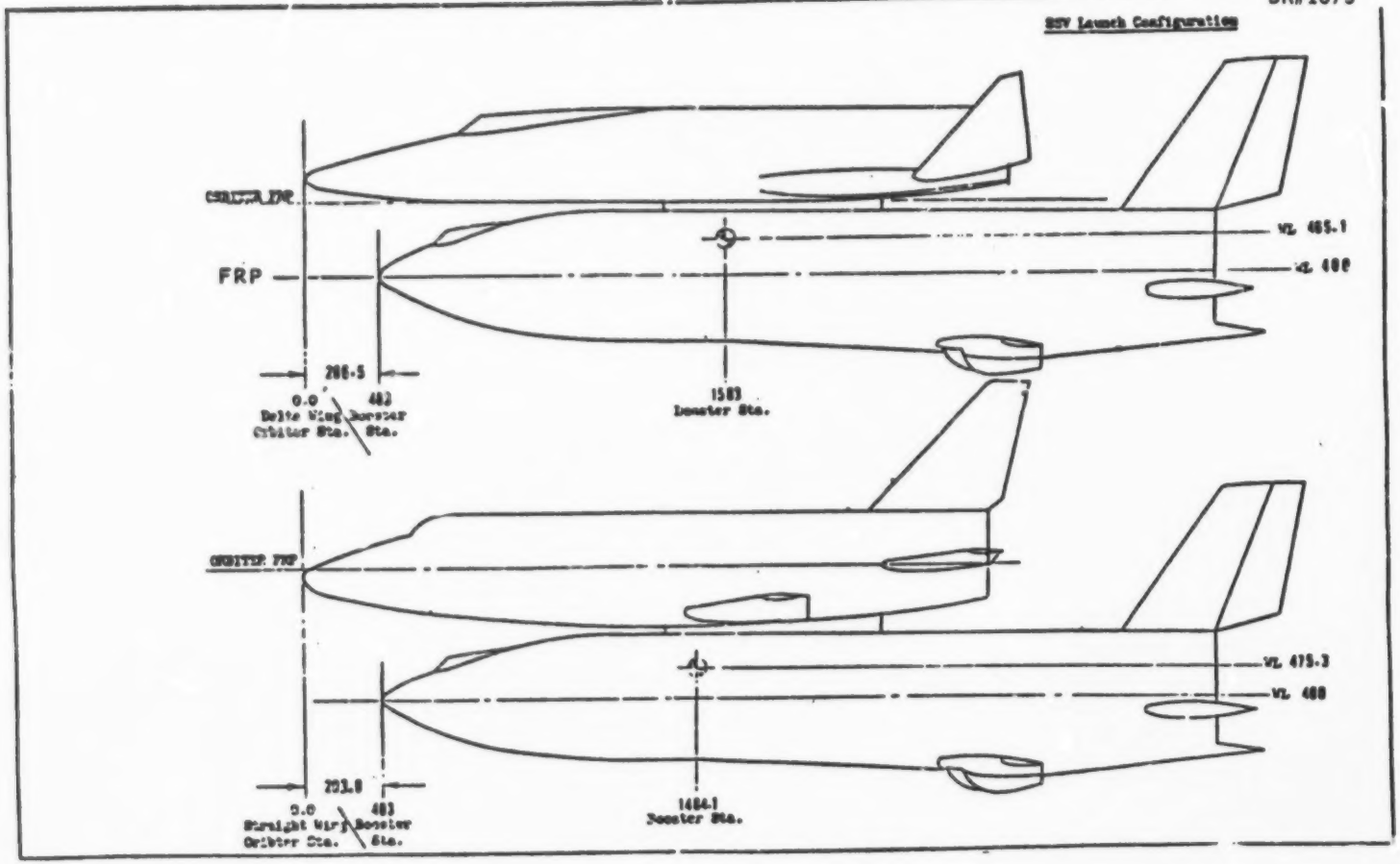

FIGURE B. LAUNCH CONFIGURATIONS, GENERAL ARRANGEMENT

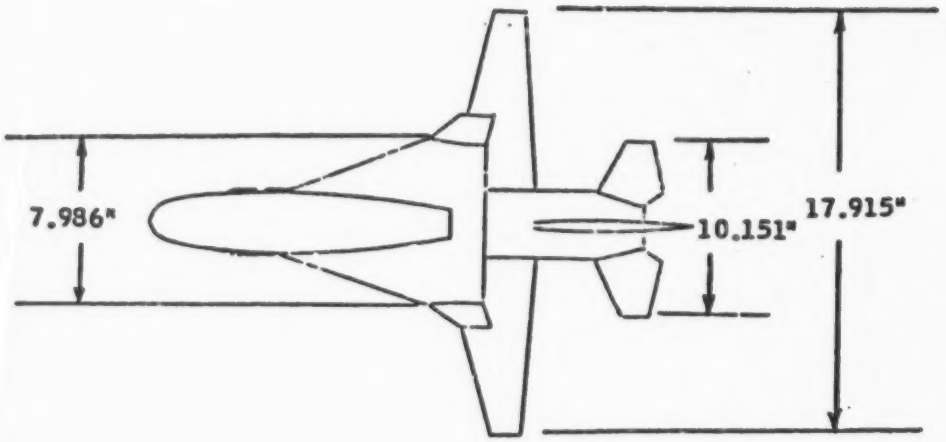

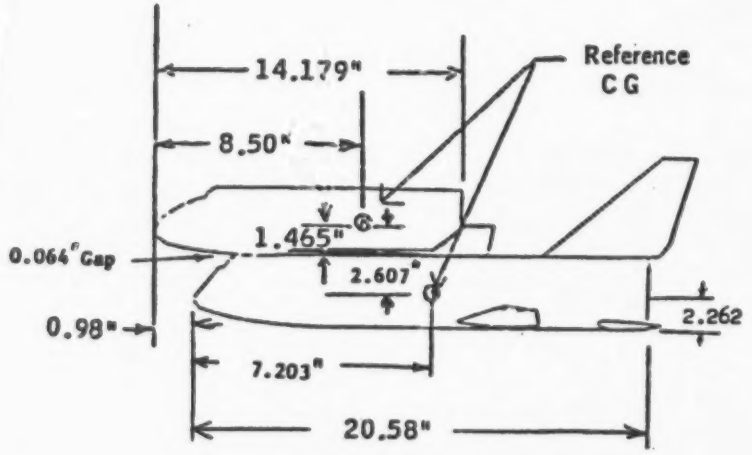

b) Delta Wing Orbiter Mated to a Straight Wing Booster

REFERENCE LENGTHS AND AREA

	ORBITER	BOOSTER and LAUNCH CONFIGURATION
S	60.925 in^2	45.827 in^2
b	7.986 in	17.915 in
$\bar{c}$	8.964 in	2.754 in

CG LOCATIONS

	XMRP	ZMRP
ORBITER	8.50 in.	1.465 in.
BOOSTER	12.34	1.675 in.
COMPOSITE	7.203 in.	2.262 in.

STRAIGHT WING BOOSTER
MSC/MDAC
DELTA WING ORBITER
MSC/MDAC
DR#1038 A-3-33

STRAIGHT WING BOOSTER
GD/C
STRAIGHT WING ORBITER
NR
DR#1075 A-3-34

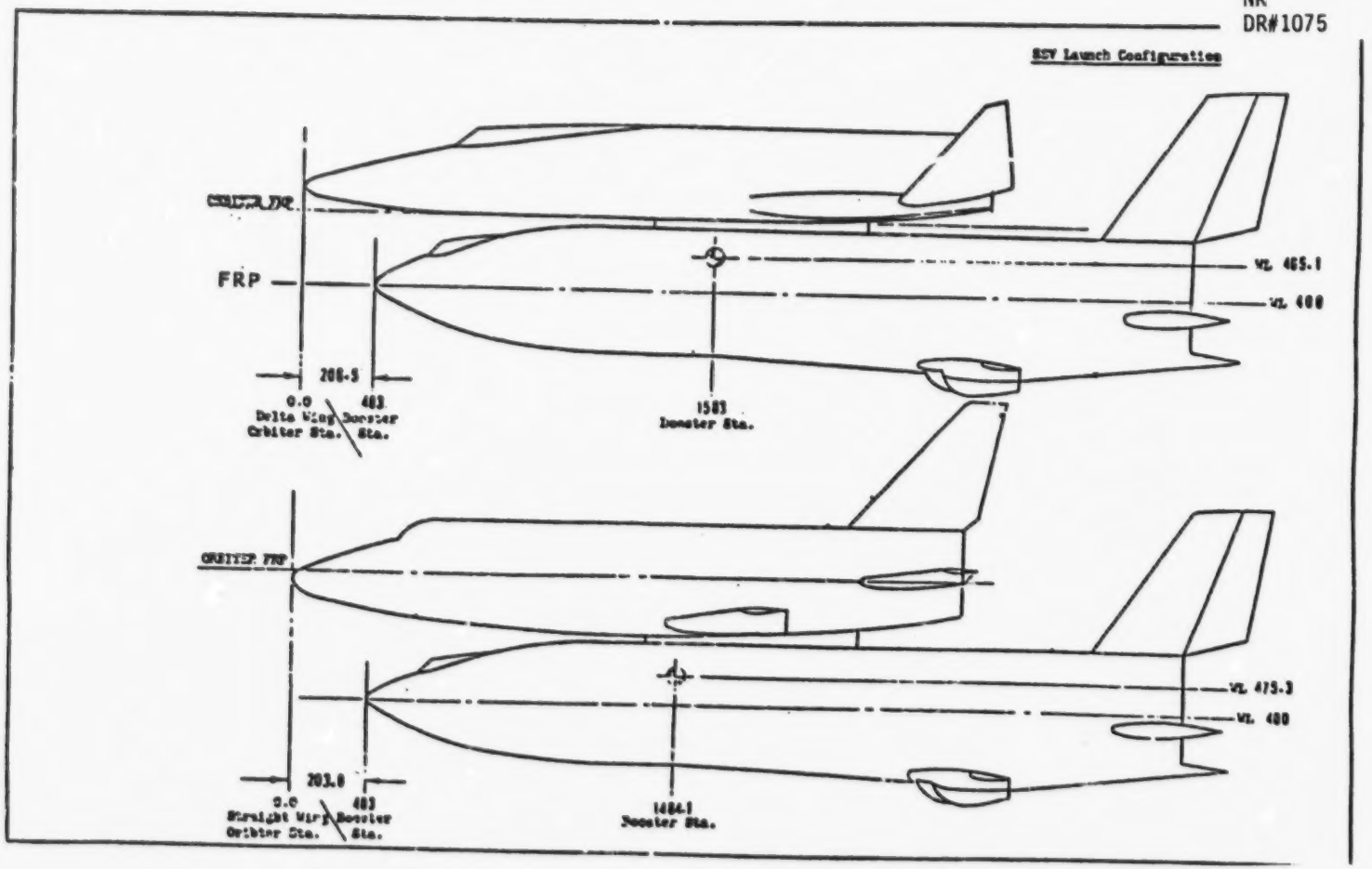

FIGURE B. LAUNCH CONFIGURATIONS, GENERAL ARRANGEMENT

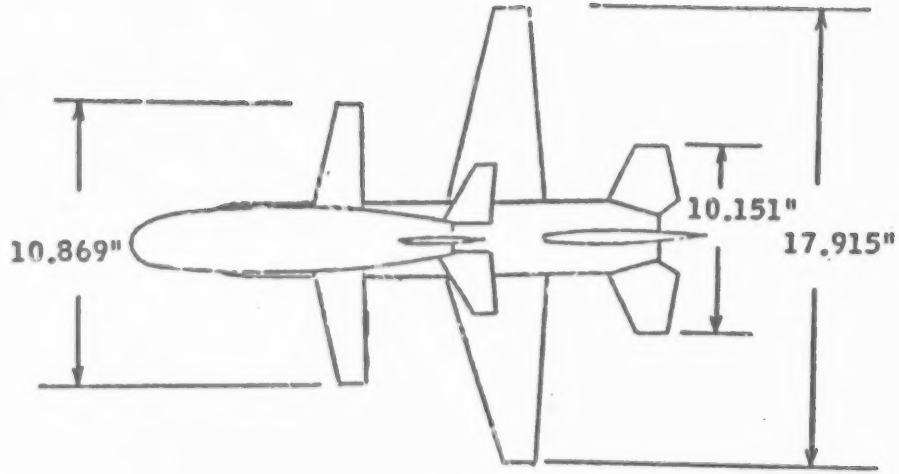

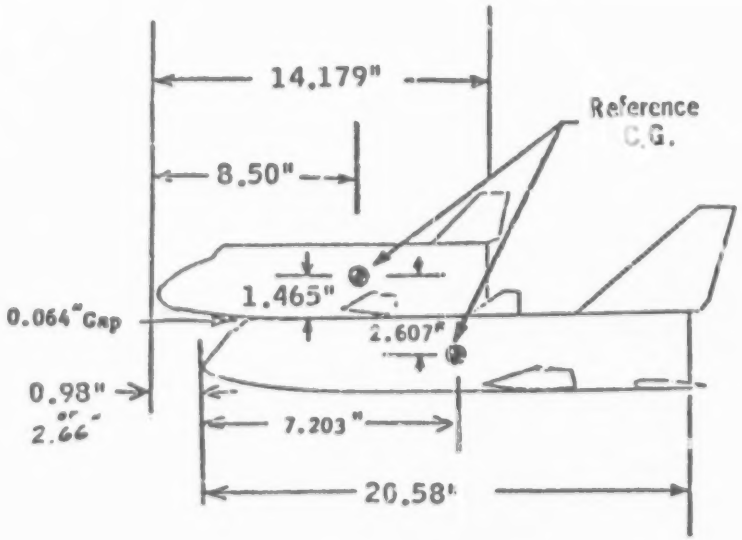

REFERENCE LENGTHS AND AREA

	ORBITER	BOOSTER and LAUNCH CONFIGURAT
S	16.956 in^2	45.827 in^2
b	10.869 in	17.915 in
$\bar{c}$	1.679 in	2.754 in

a) Straight Wing Orbiter Mated to the Straight Wing Booste

Figure 4. - Straight Wing Booster Launch Configuration

STRAIGHT WING BOOSTER
MSC
STRAIGHT WING ORBITER
MSC
DR#1063 A-3-35

STRAIGHT WING BOOSTER
MSC/MDAC
STRAIGHT WING ORBITER
MSC/MDAC
DR#1038 A-3-36

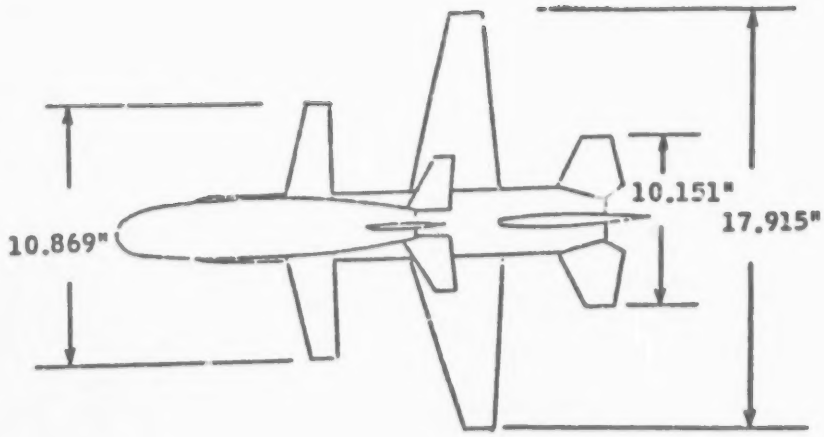

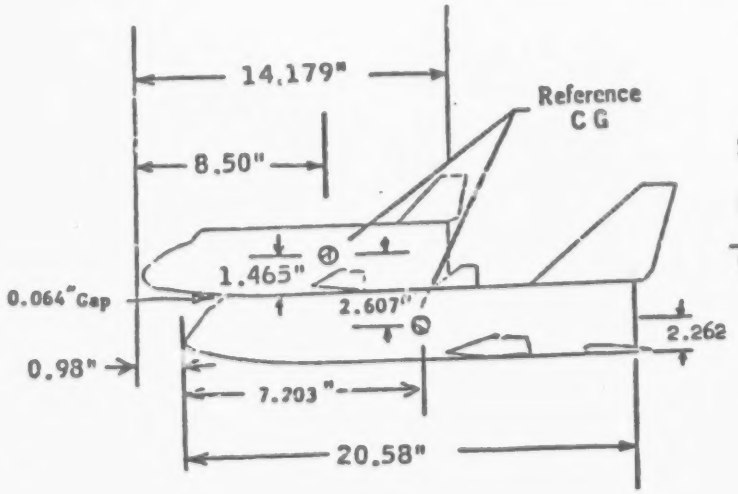

REFERENCE LENGTHS AND AREA

	ORBITER	BOOSTER and LAUNCH CONFIGURATION
S	16.956 in^2	45.827 in^2
b	10.869 in^2	17.915 in
$\overline{c}$	1.679 in	2.754 in

CG LOCATIONS

	XBRP	ZBRP
ORBITER	8.50 in.	1.465 in.
BOOSTER	12.34	1.675 in.
COMPOSITE	7.203 in.	2.262 in.

a) Straight Wing Orbiter Mated to the Straight Wing Booster

Figure 5. - Straight Wing Booster Launch Configuration

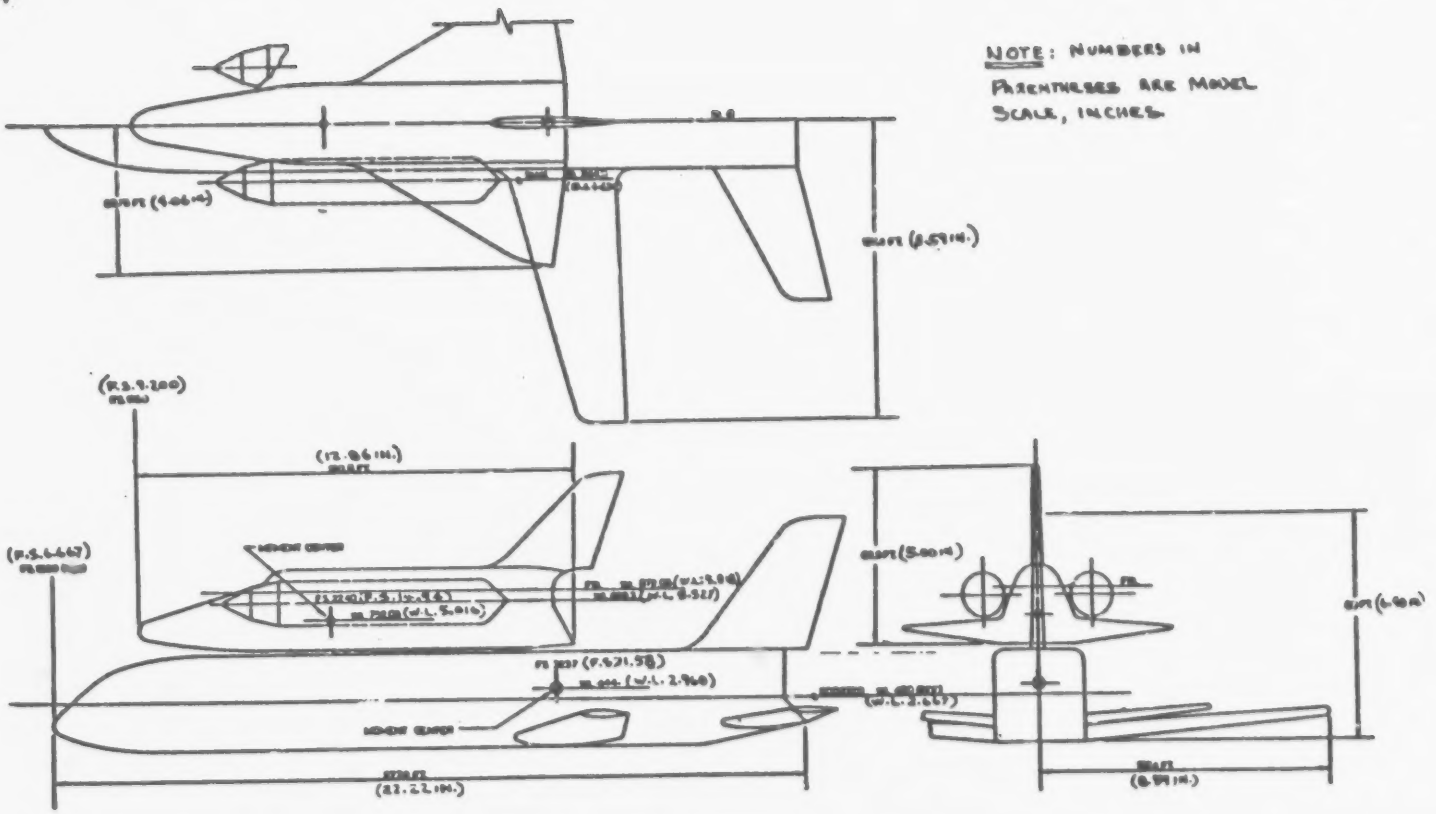

Figure D.- Launch configuration with orbiter mounted in the A_1 position, showing moment center locations.

STRAIGHT WING BOOSTER
TBC
UNIQUE CONFIG. ORBITER
GAC
DR#1122 A-3-37

UNIQUE CONFIG. BOOSTER
LMSC
DELTA BODY ORBITER
LMSC
DR#1085 A-3-38

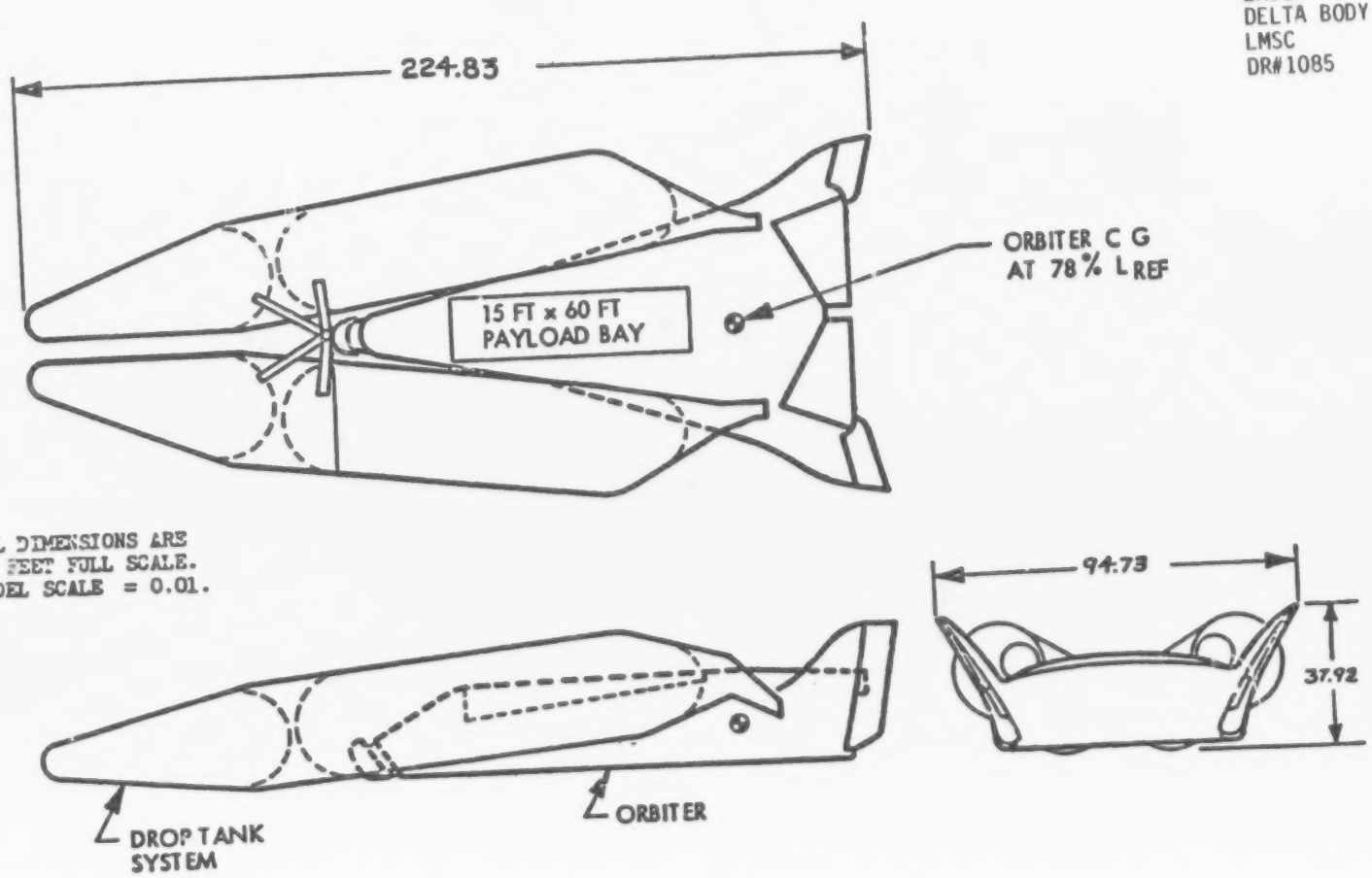

FIGURE 3. LAUNCH VEHICLE CONFIGURATION $T_2B_4F_{16}$ THREE-VIEW.

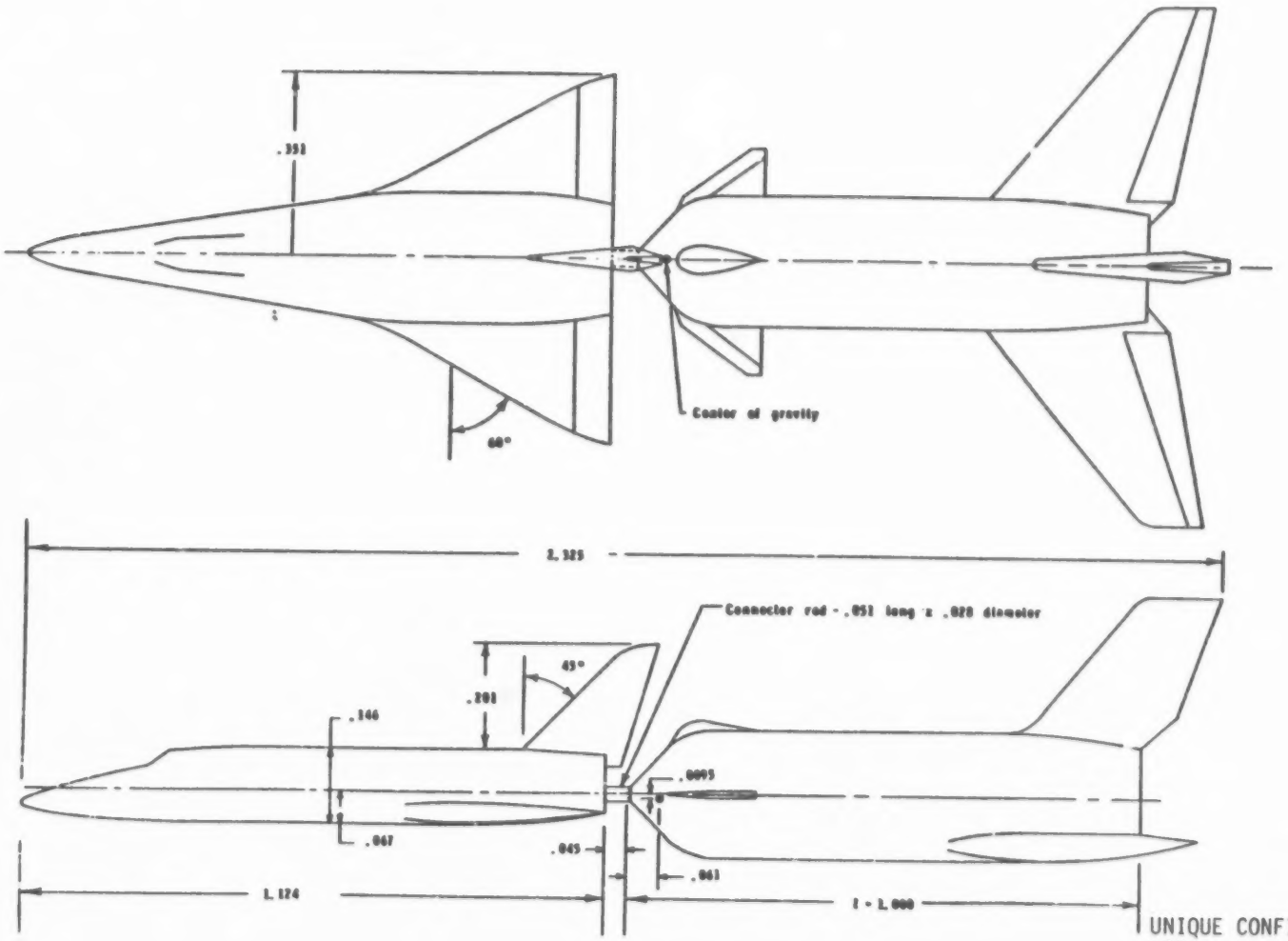

UNIQUE CONFIG. BOOSTER
LARC
DELTA WING ORBITER
NR
DR#1198 A-3-39

Figure 3. Ascent configuration. All dimensions in percent of booster fuselage length (8.90-inch)

UNIQUE CONFIG. BOOSTER
TBC
DELTA WING ORBITER
NR
DR#1091 A-3-40

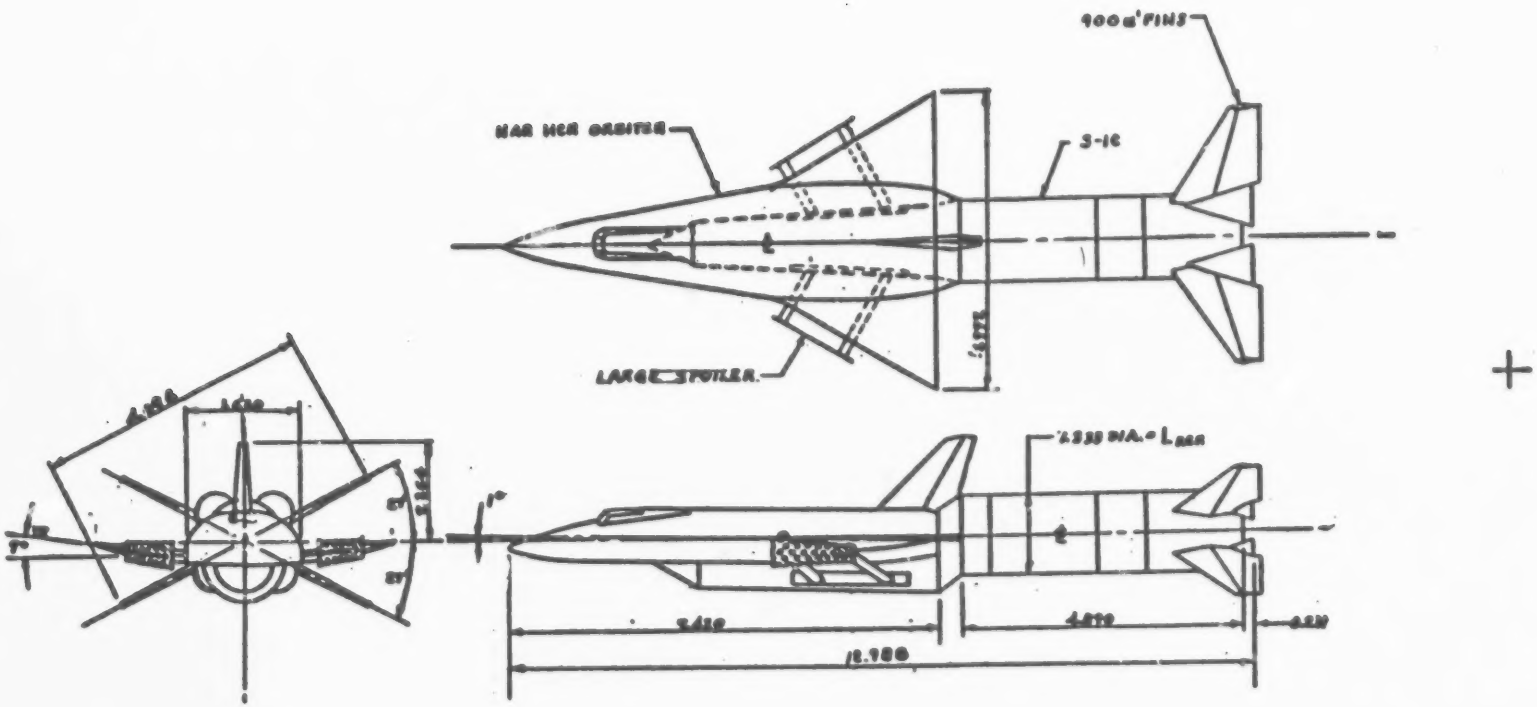

FIGURE 11. S-IC/NAR HCR ORBITER WITH SPOILERS, 0.003366 SCALE MODEL

DRAWING NOT TO SCALE

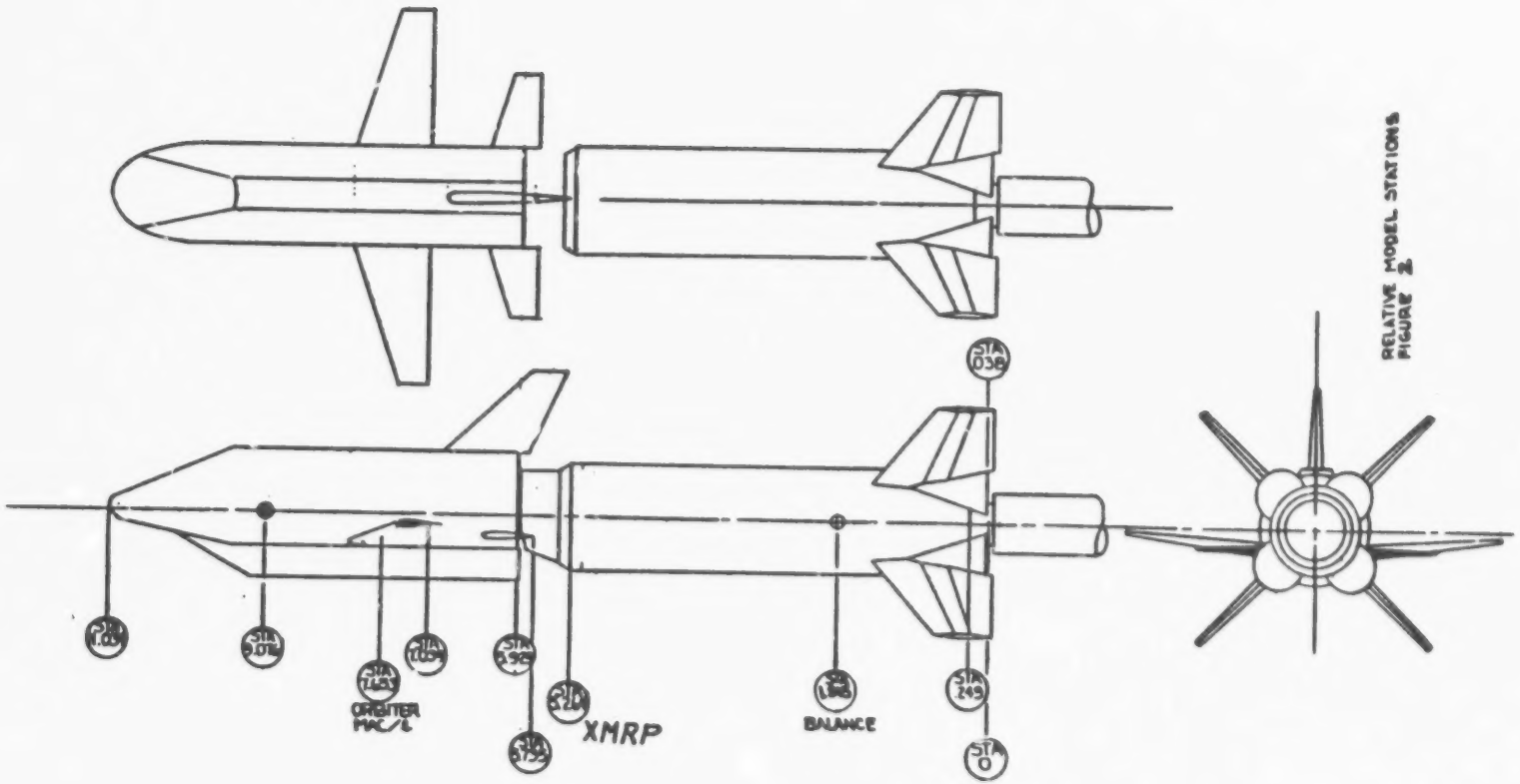

RELATIVE MODEL STATIONS
FIGURE 2

UNIQUE CONFIG. BOOSTER
TBC
STRAIGHT WING ORBITER
GAC
DR#1044 A-3-41

UNIQUE CONFIG. BOOSTER
MMC
UNIQUE CONFIG. ORBITER
GAC
DR#1188-1 A-3-42

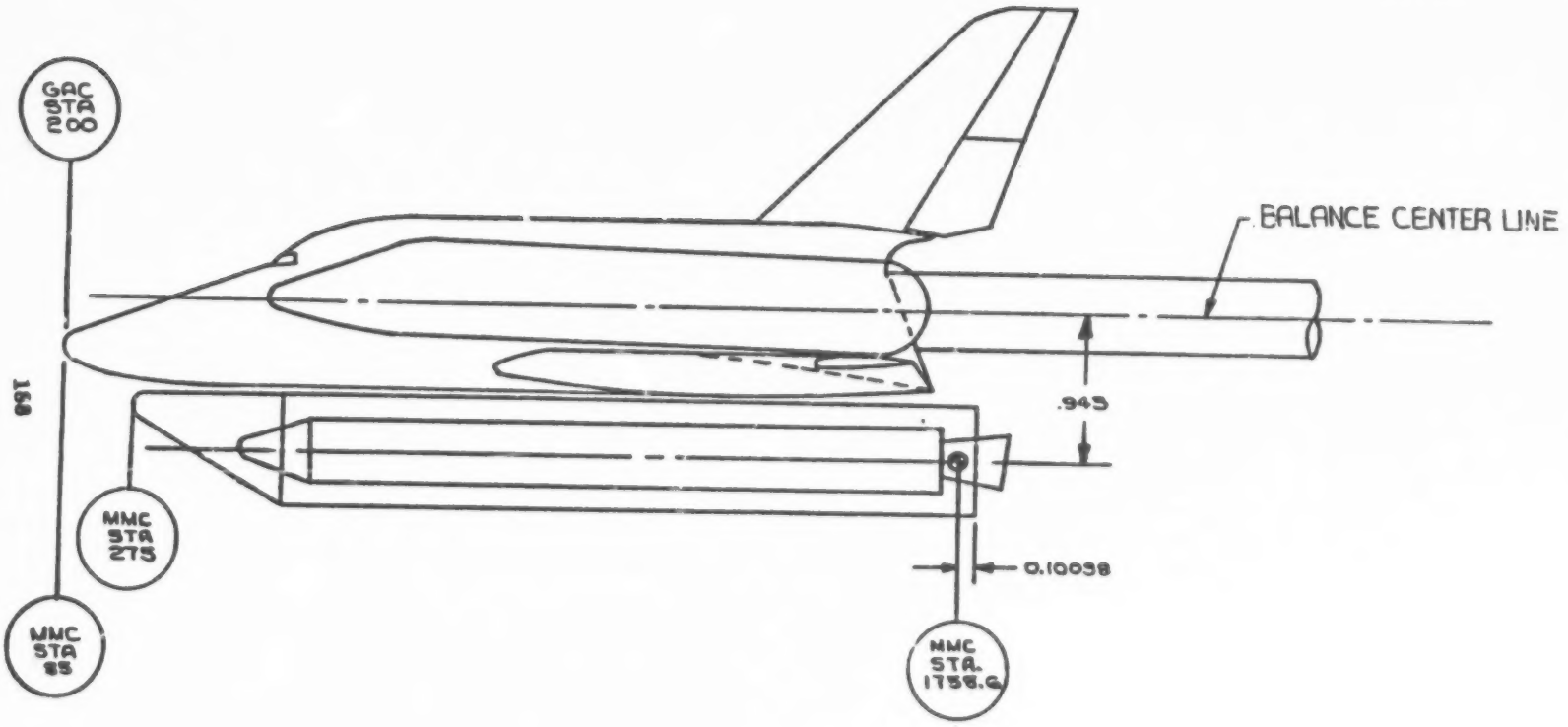

FIGURE 3. T IIIL (1207-4)/GAC H-33 PIGGYBACK SPREAD CONFIGURATION

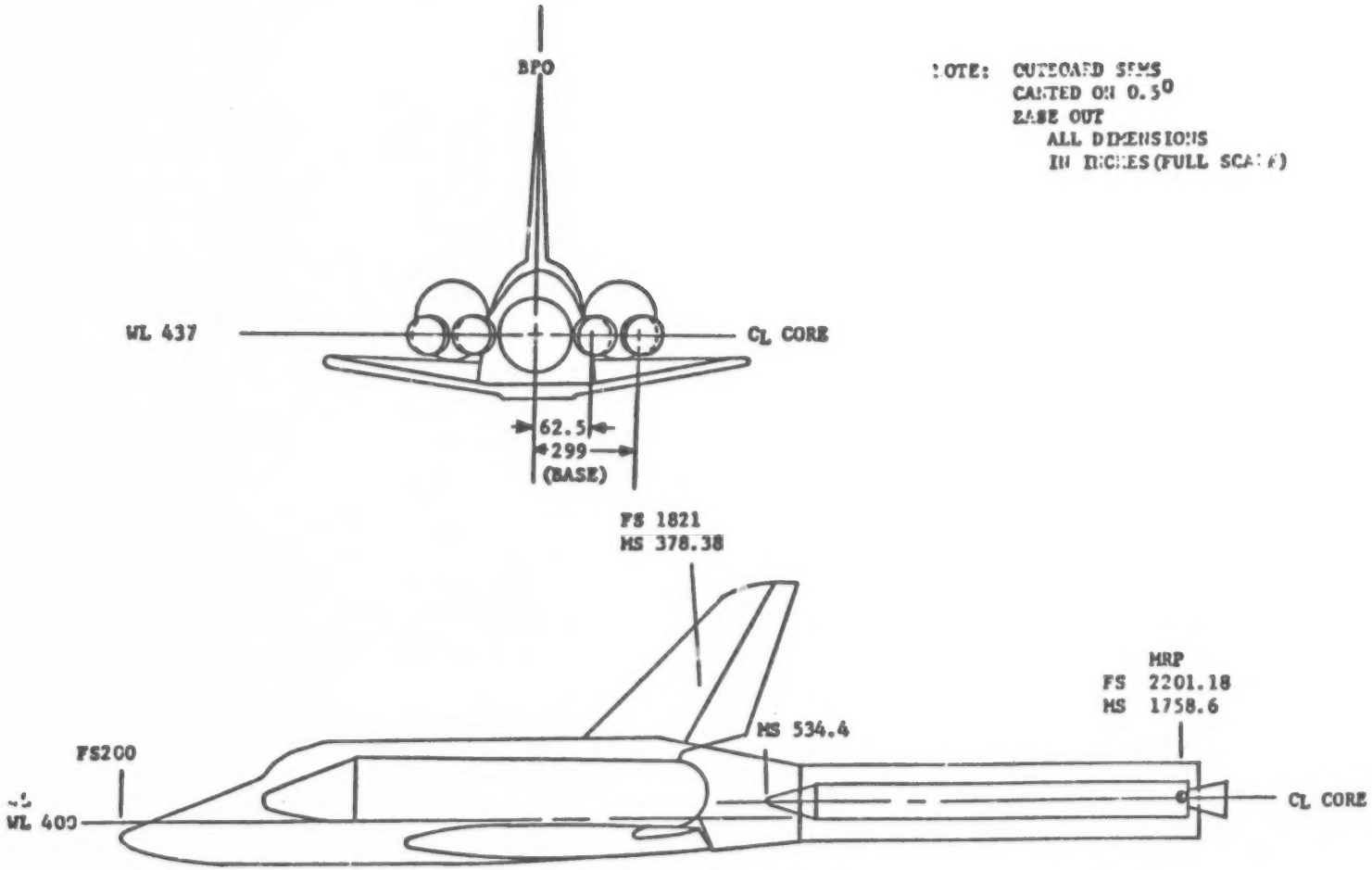

NOTE: OUTBOARD SRMS CANTED ON 0.5° BASE OUT
ALL DIMENSIONS IN INCHES (FULL SCALE)

FIGURE 4. TIIIL (1207-4)/GAC H-33 (SPREAD) TANDEM CONFIGURATION

UNIQUE CONFIG. BOOSTER
MMC
UNIQUE CONFIG. ORBITER
GAC
DR#1188-2 A-3-43

UNIQUE CONFIG. BOOSTER
MMC
UNIQUE CONFIG. ORBITER
MMC
DR#1182-1 A-3-44

FIGURE 6. DTO-7/1205-4 OEL LAUNCH CONFIGURATION, O1 D1 L2

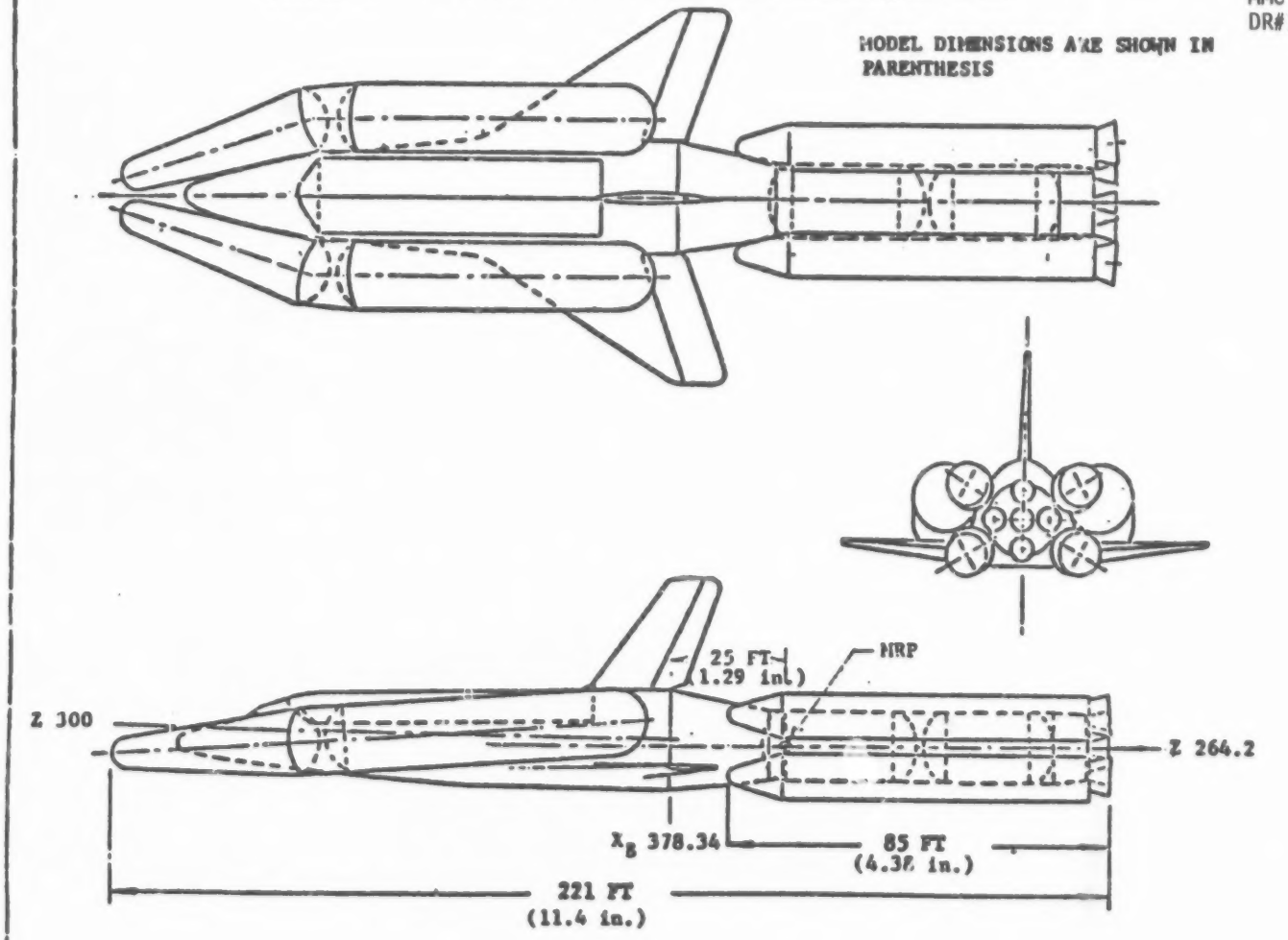

Figure 7. DTO-7/1207-4 TEL LAUNCH CONFIGURATION, 01D2L4

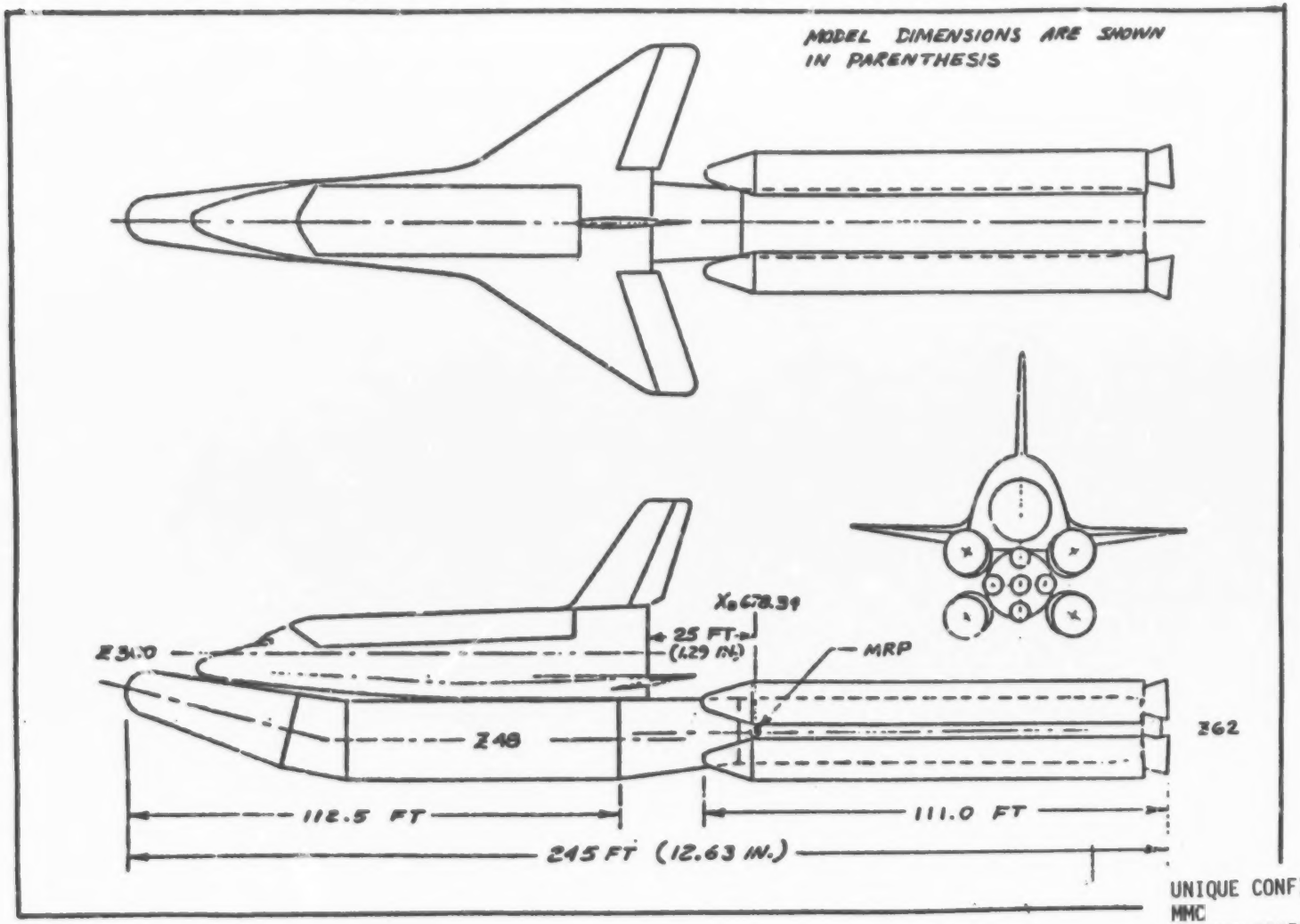

UNIQUE CONFIG. BOOSTER
MMC
UNIQUE CONFIG. ORBITER
MMC
DR#1182-2 A-3-45

UNIQUE CONFIG. BOOSTER
TBC
UNIQUE CONFIG. ORBITER
GAC
DR#1140 A-3-46

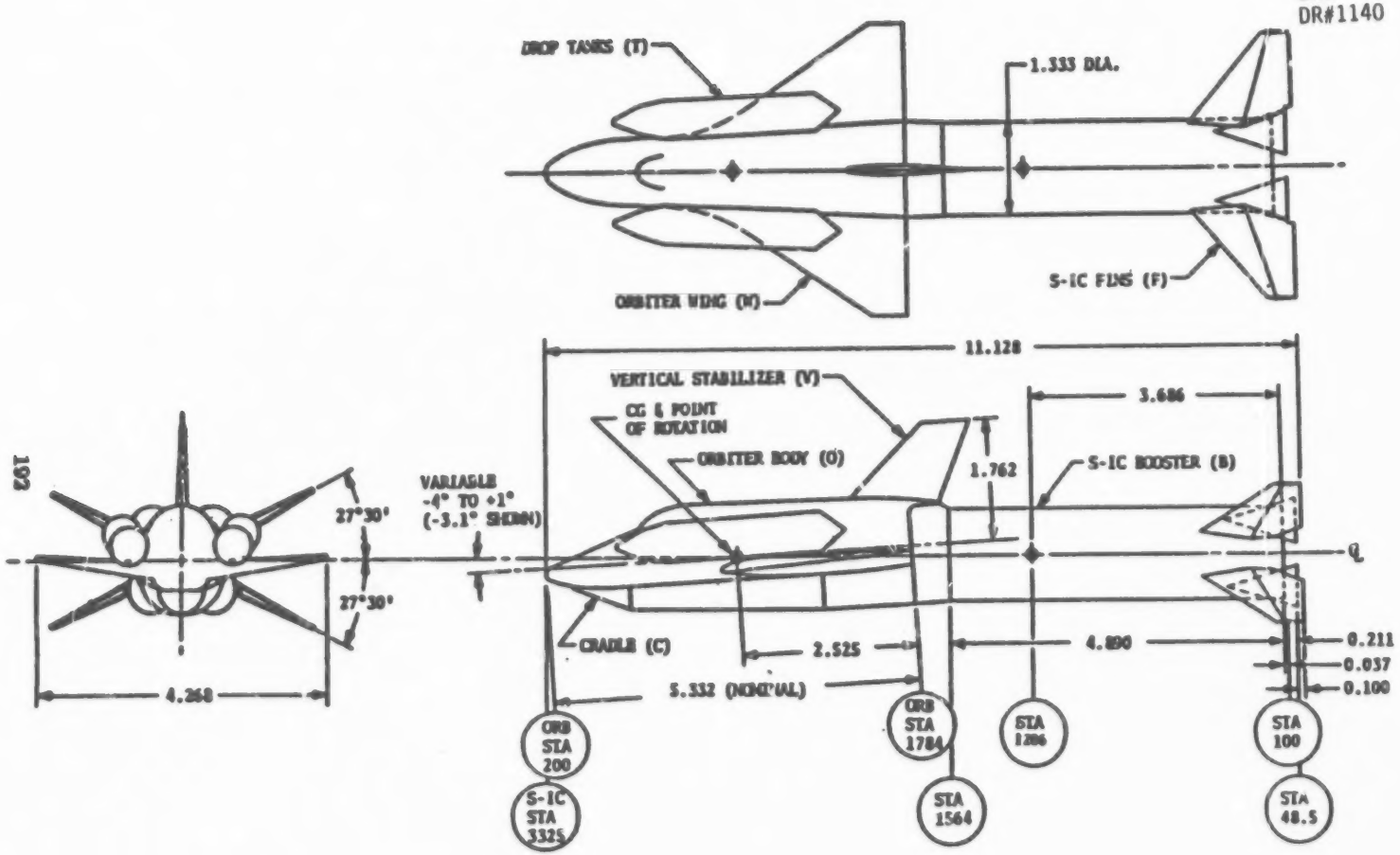

FIGURE 2. G-11 Orbiter/S-IC 0.003366 Scale Model

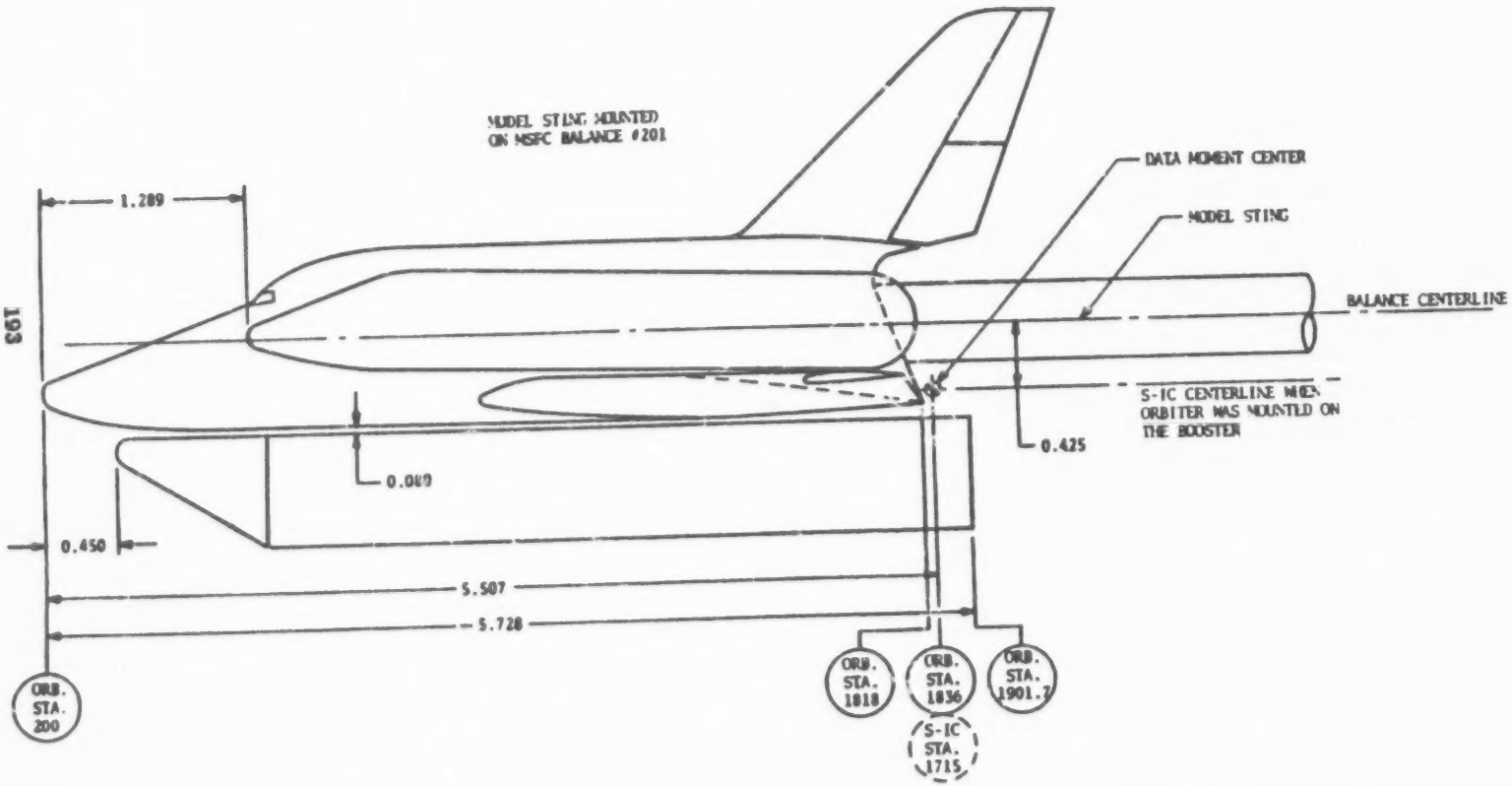

FIGURE 3. H-33 GRUMMAN ORBITER WITH S-IC CRADLE

UNIQUE CONFIG. BOOSTER
TBC
UNIQUE CONFIG. ORBITER
GAC
DR#1187

APPENDIX B-1

MODEL FIGURES

BOOSTER AIRLOADS

ORIGINAL PAGE IS
OF POOR QUALITY

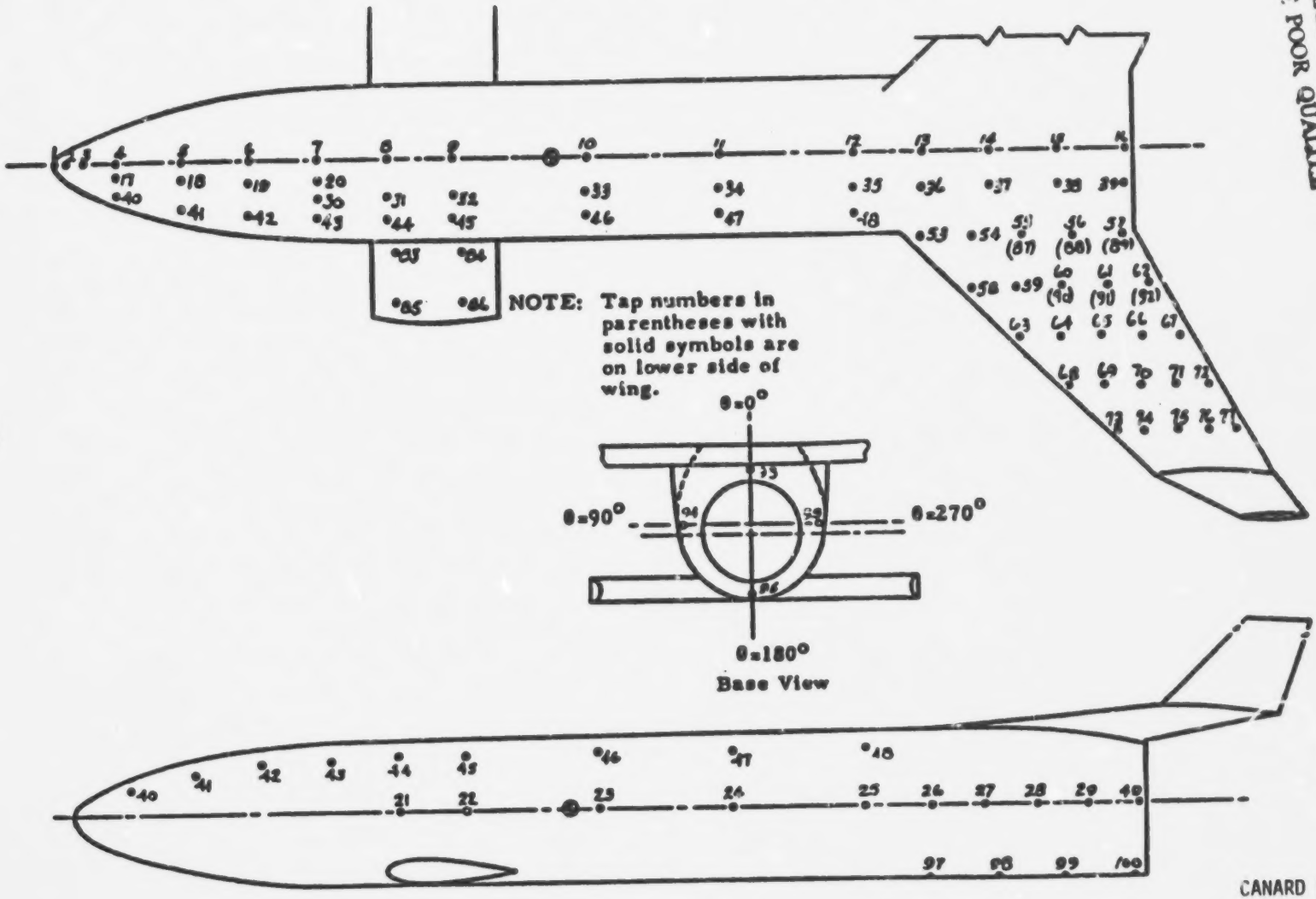

CANARD BOOSTER
MDAC
DR#1222
B-1-1

Fig. 2 - Pressure Tap Layout - Booster

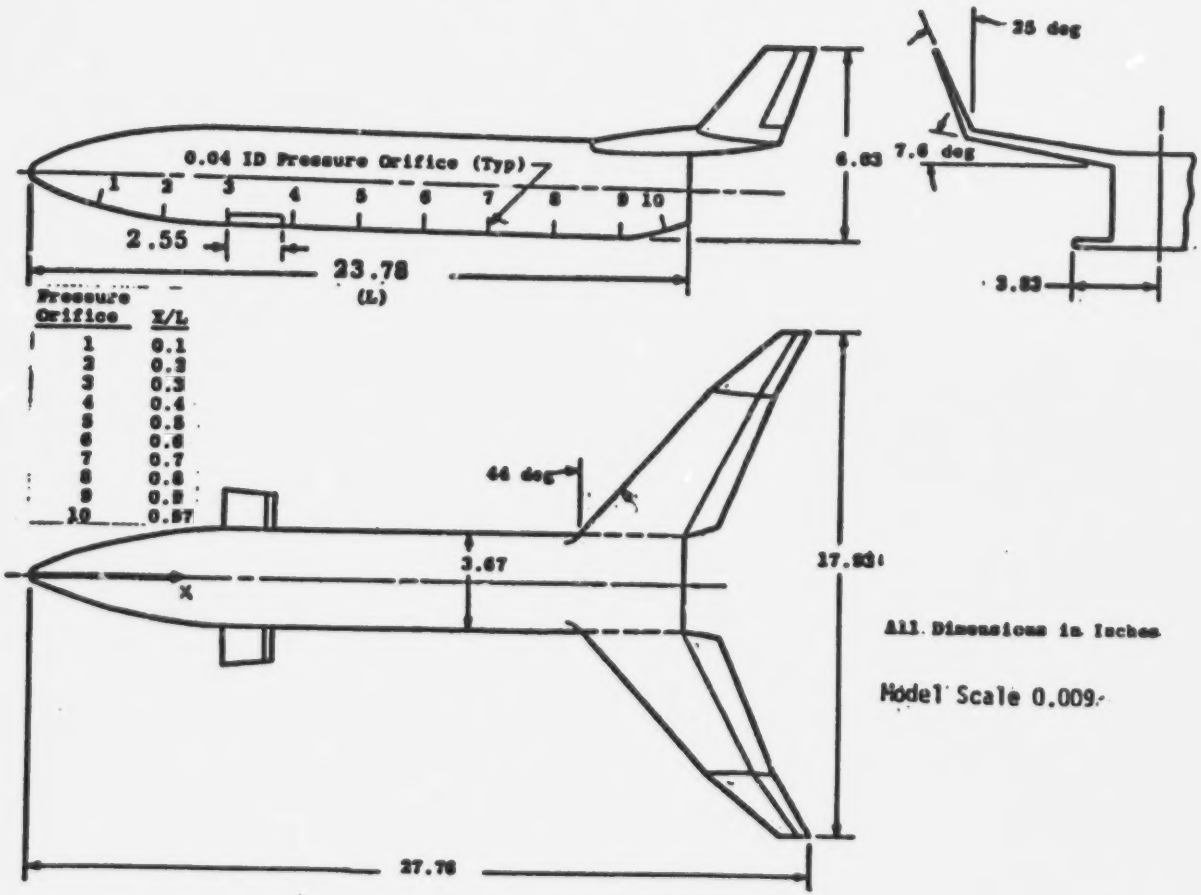

Figure 1. McDonnell-Douglas Booster Model Sketch (0.009 Scale)

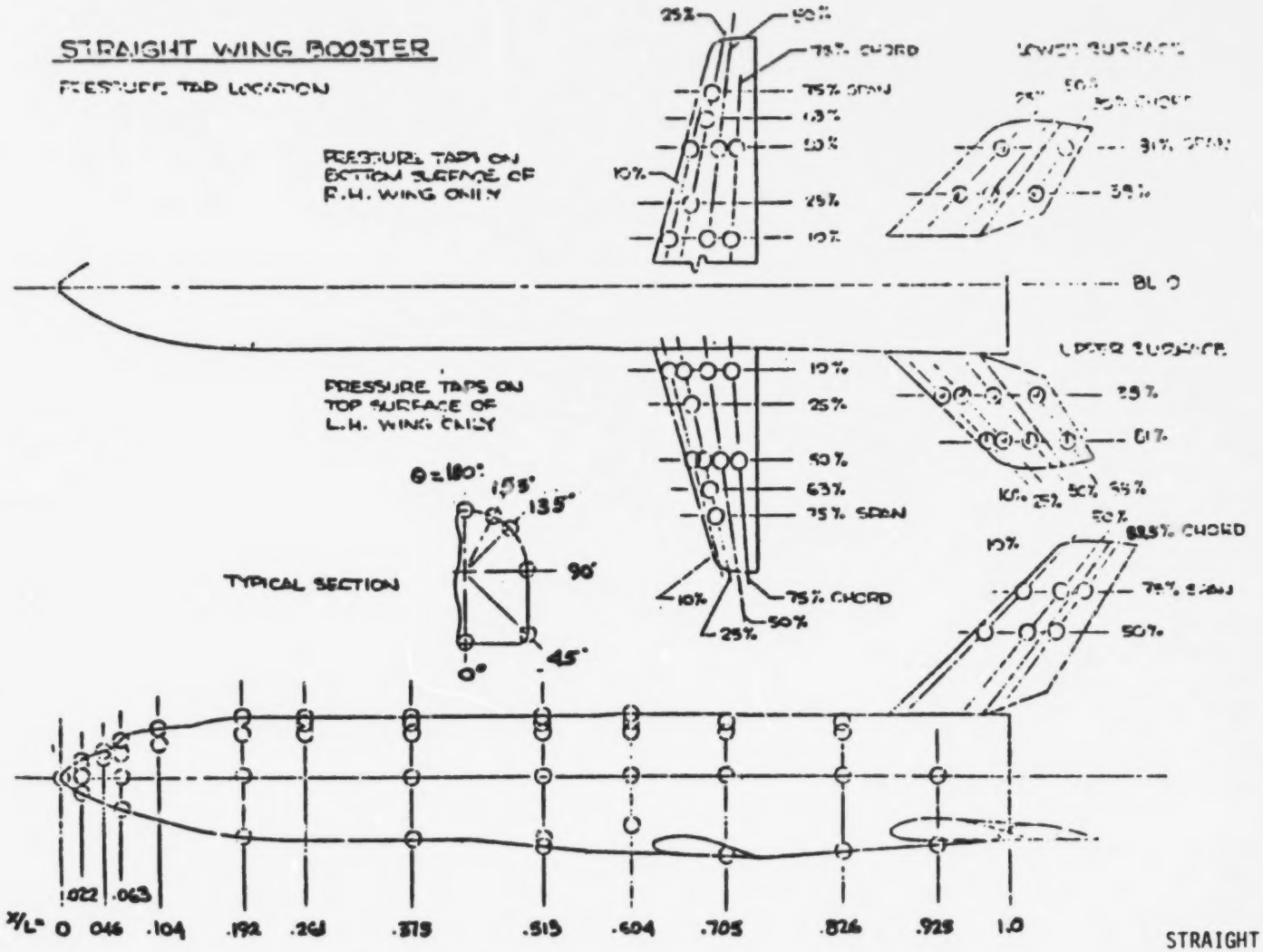

FIGURE 8 BOOSTER PRESSURE ORIFICE LOCATIONS

ORIGINAL PAGE IS
OF POOR QUALITY

STRAIGHT WING BOOSTER
GD/C
DR#1129
B-1-3

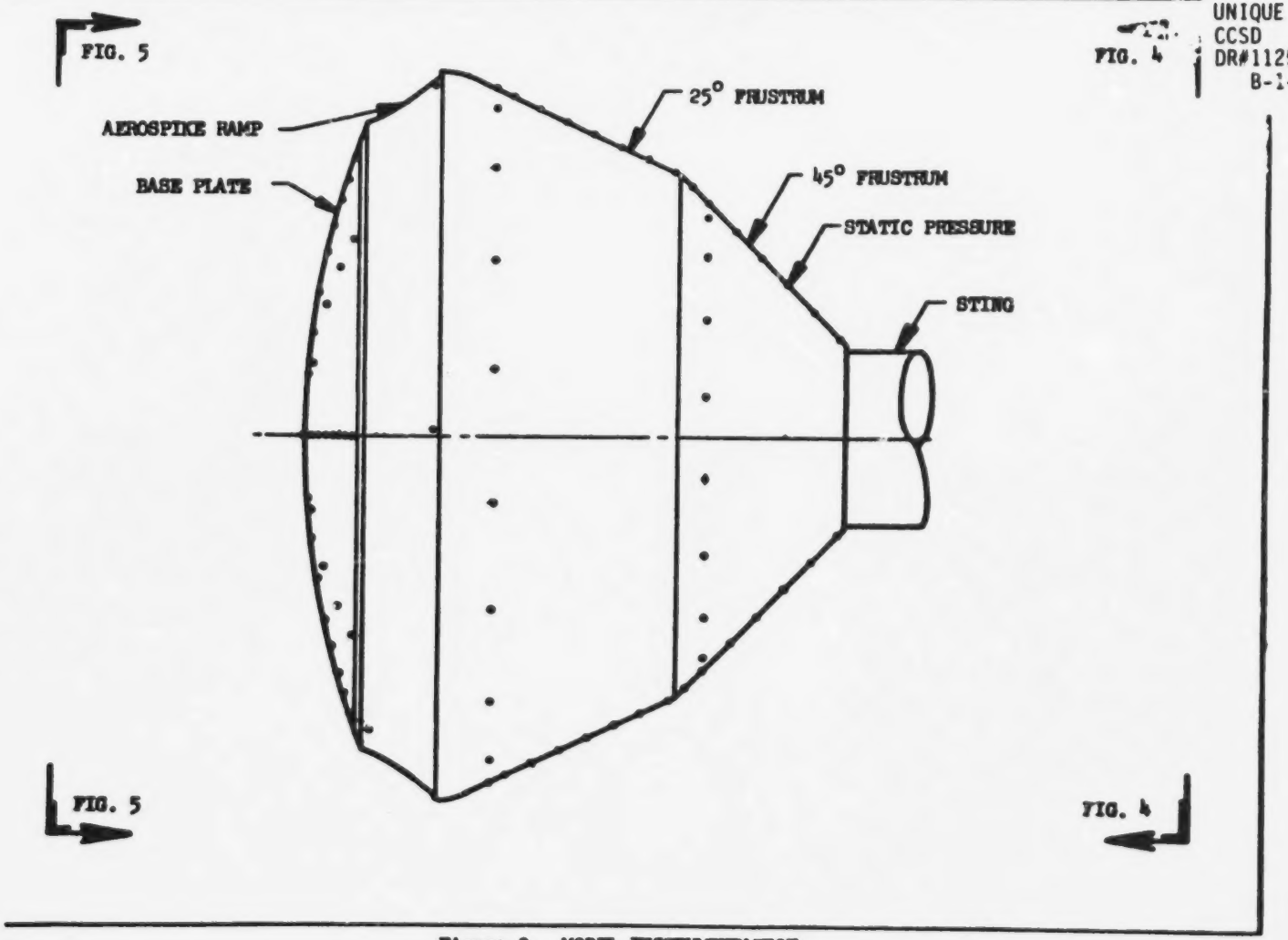

Figure 3. MODEL INSTRUMENTATION

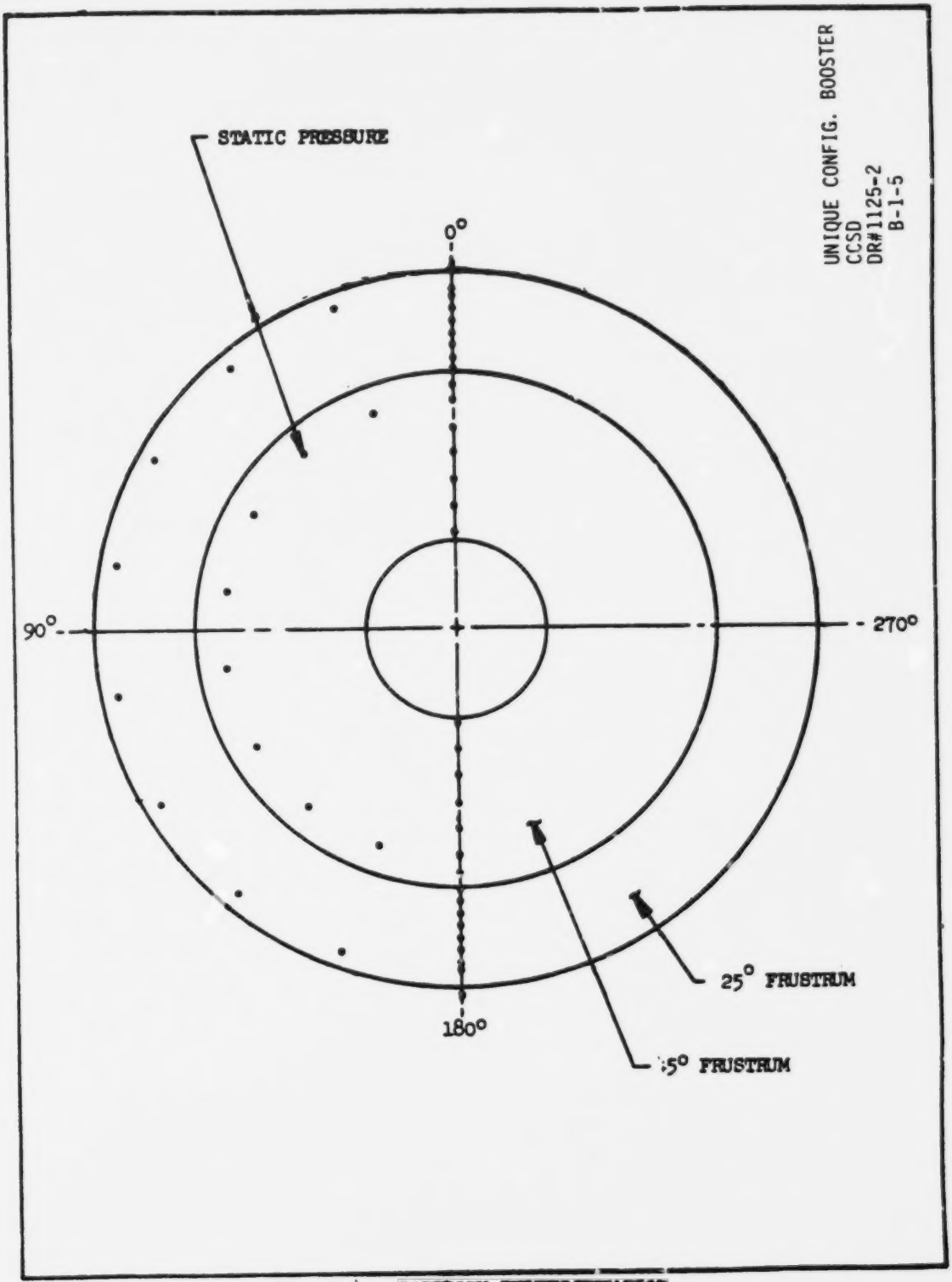

Figure 4. FOREBODY INSTRUMENTATION

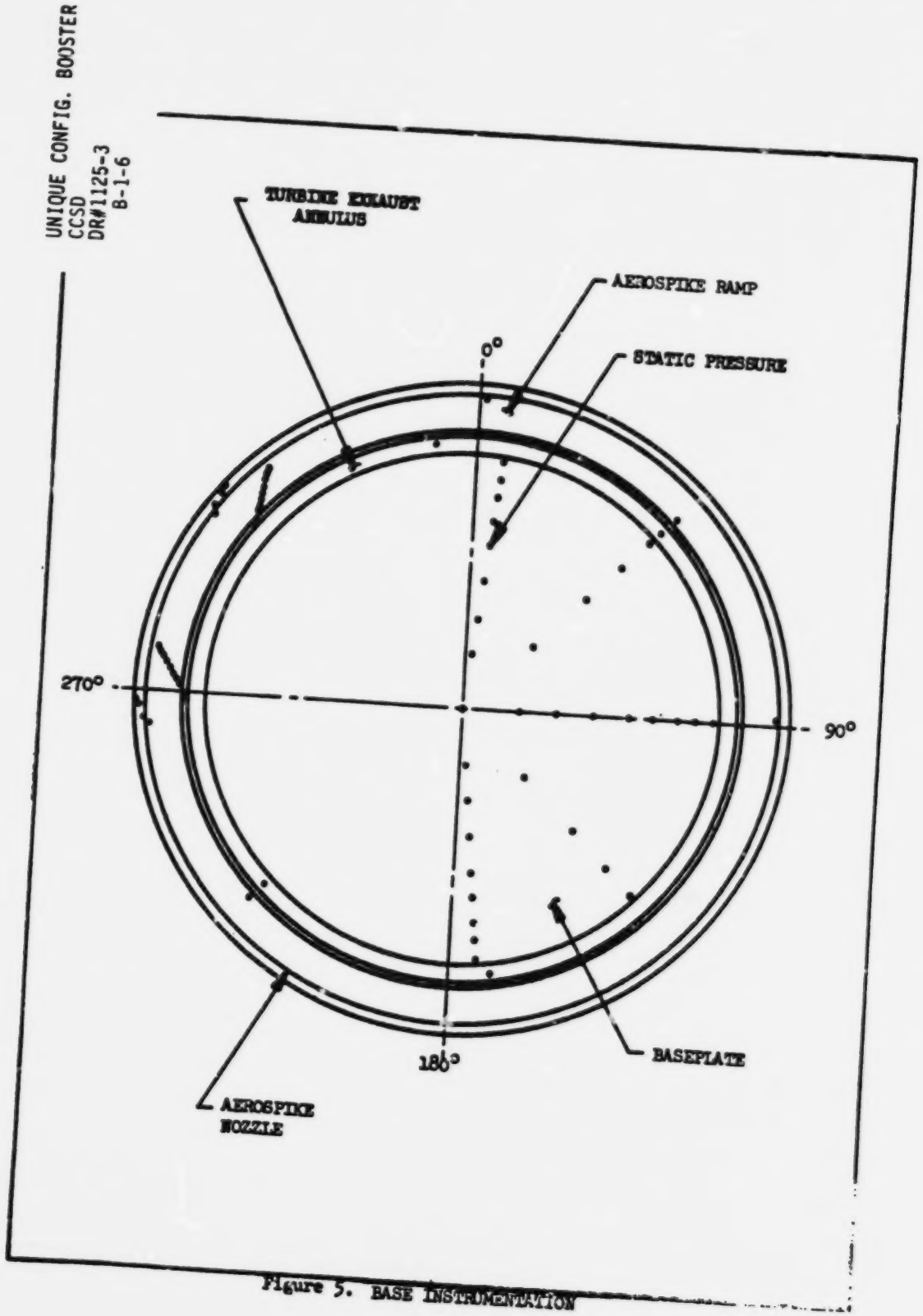

Figure 5. BASE INSTRUMENTATION

APPENDIX B-2

MODEL FIGURES

ORBITER AIRLOADS

PRECEDING PAGE BLANK NOT FILMED

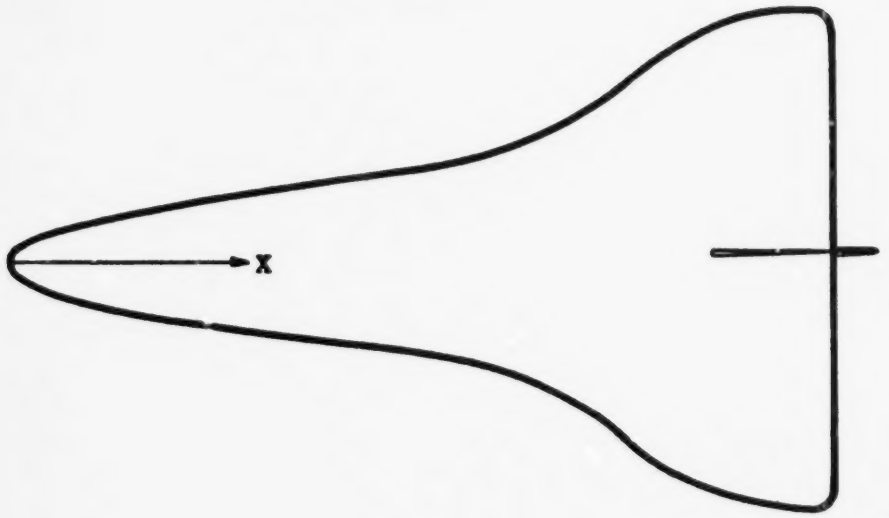

Pressure Orifice	X/L
1	0.1
2	0.2
3	0.3
4	0.4
5	0.5
6	0.6
7	0.7
8	0.8
9	0.916
10	0.970

All Dimensions in Inches

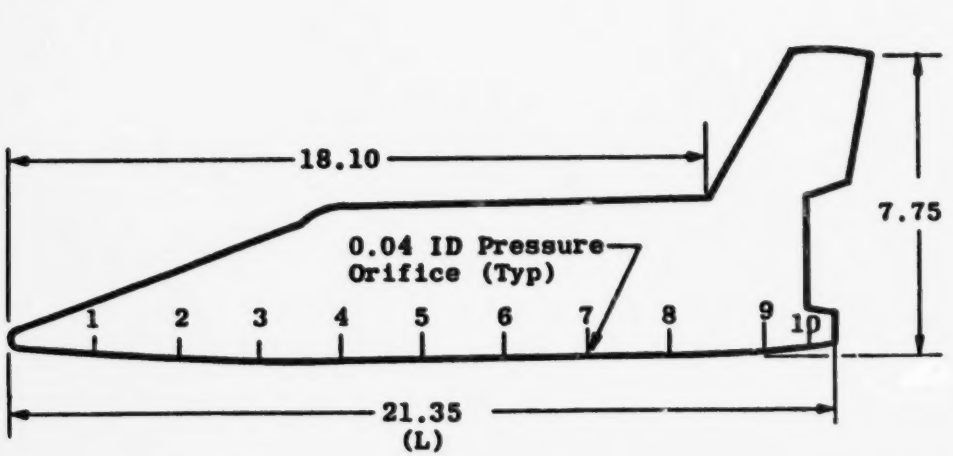

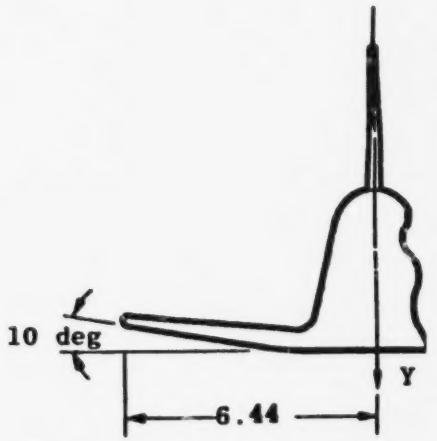

Fig. 1 McDonnell Douglas Delta Wing Orbiter Model Sketch (0.011 Scale)

DELTA WING ORBITER
MDAC
DR#1225
B-2-1

Numbers in parenthesis are on the lower surface

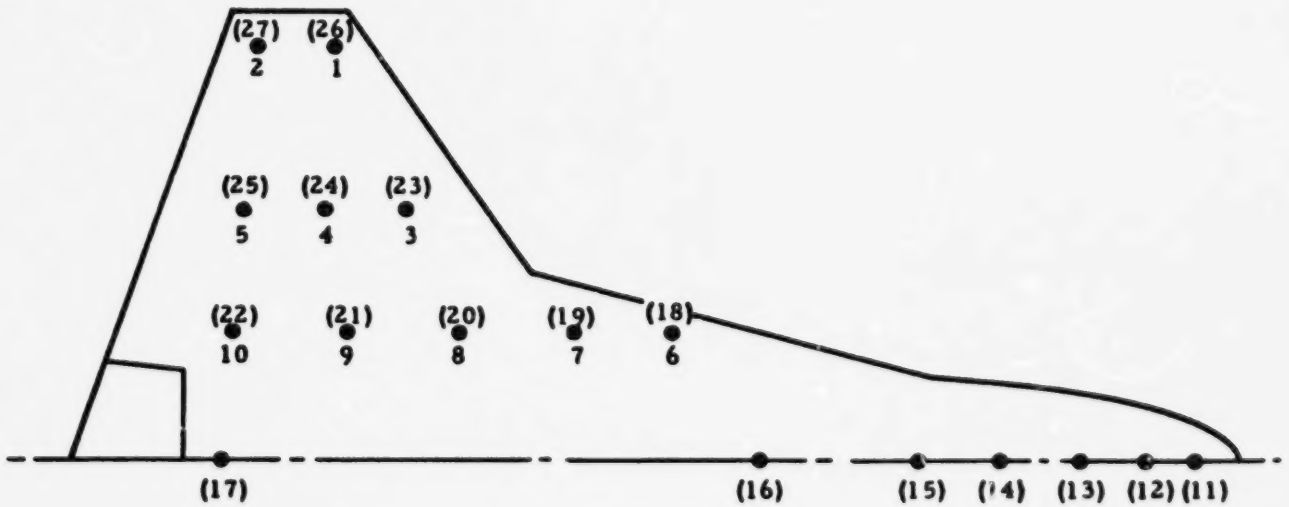

Fig. 4 - Static Pressure Tap Positions

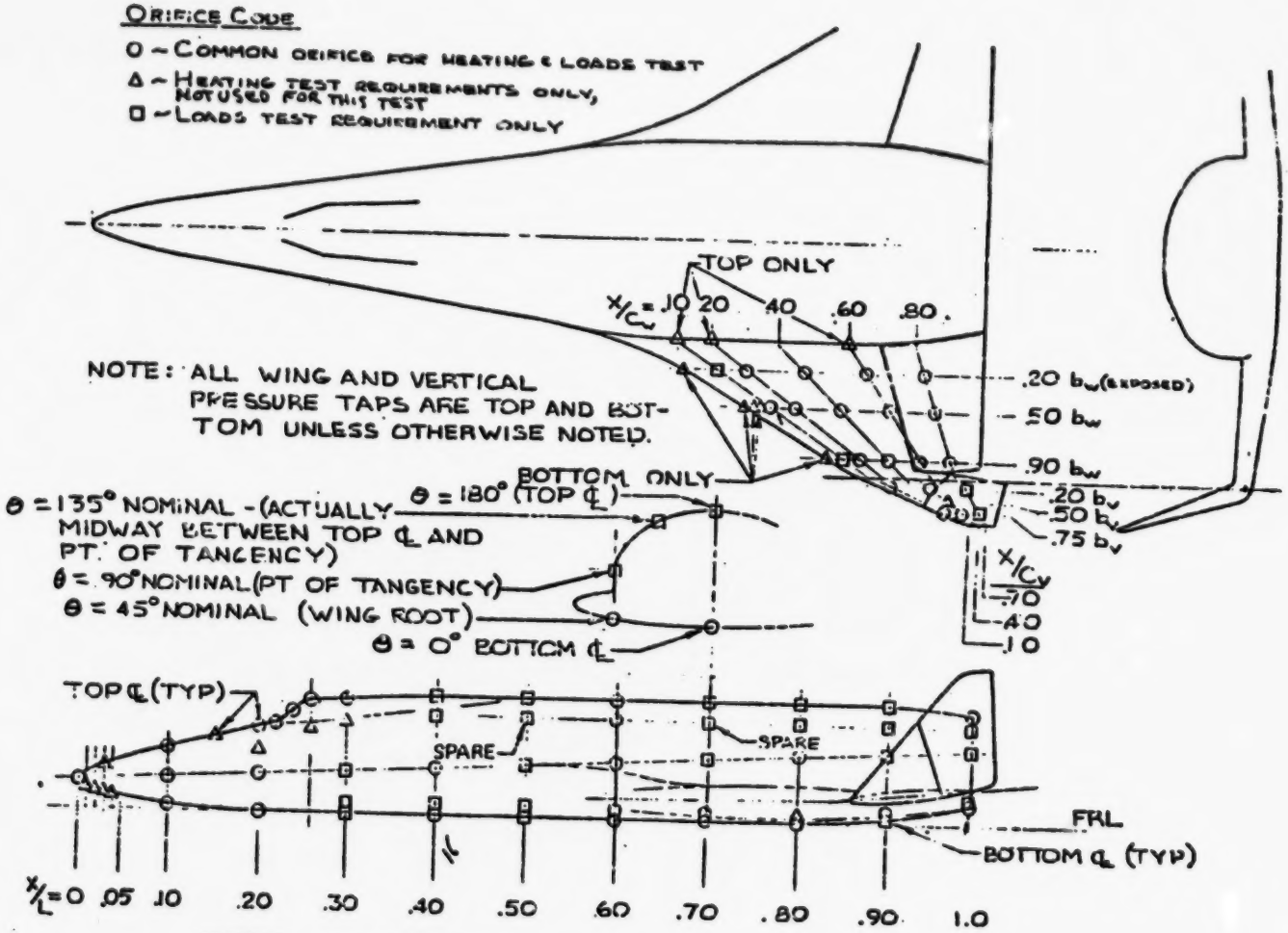

FIGURE 7 DELTA WING ORBITER PRESSURE ORIFICE LOCATIONS

ORIGINAL PAGE IS
OF POOR QUALITY

DELTA WING ORBITER
NR
DR#1129
B-2-3

DELTA WING ORBITER
NR
DR#1225
B-2-4

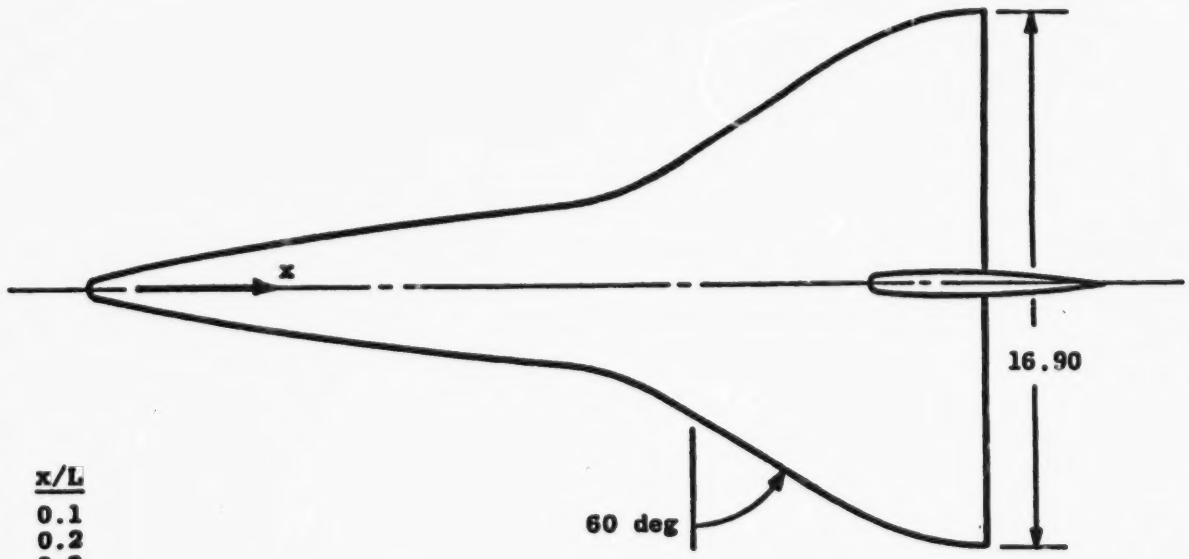

Pressure Orifice	x/L
1	0.1
2	0.2
3	0.3
4	0.4
5	0.5
6	0.6
7	0.7
8	0.8
9	0.9
10	0.97

All Dimensions in Inches
Model Scale ~ 0.013

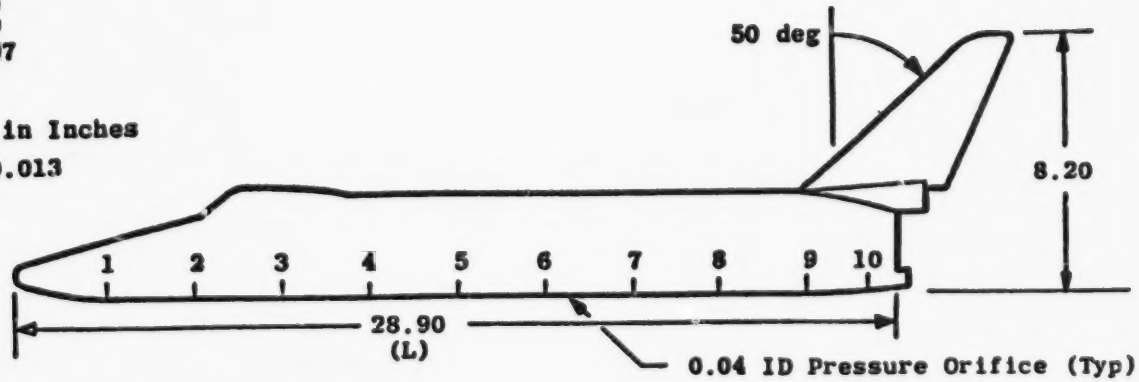

Fig. 1 North American Rockwell Delta Wing Orbiter Model Sketch (0.013 Scale)

ORIGINAL PAGE IS
OF POOR QUALITY

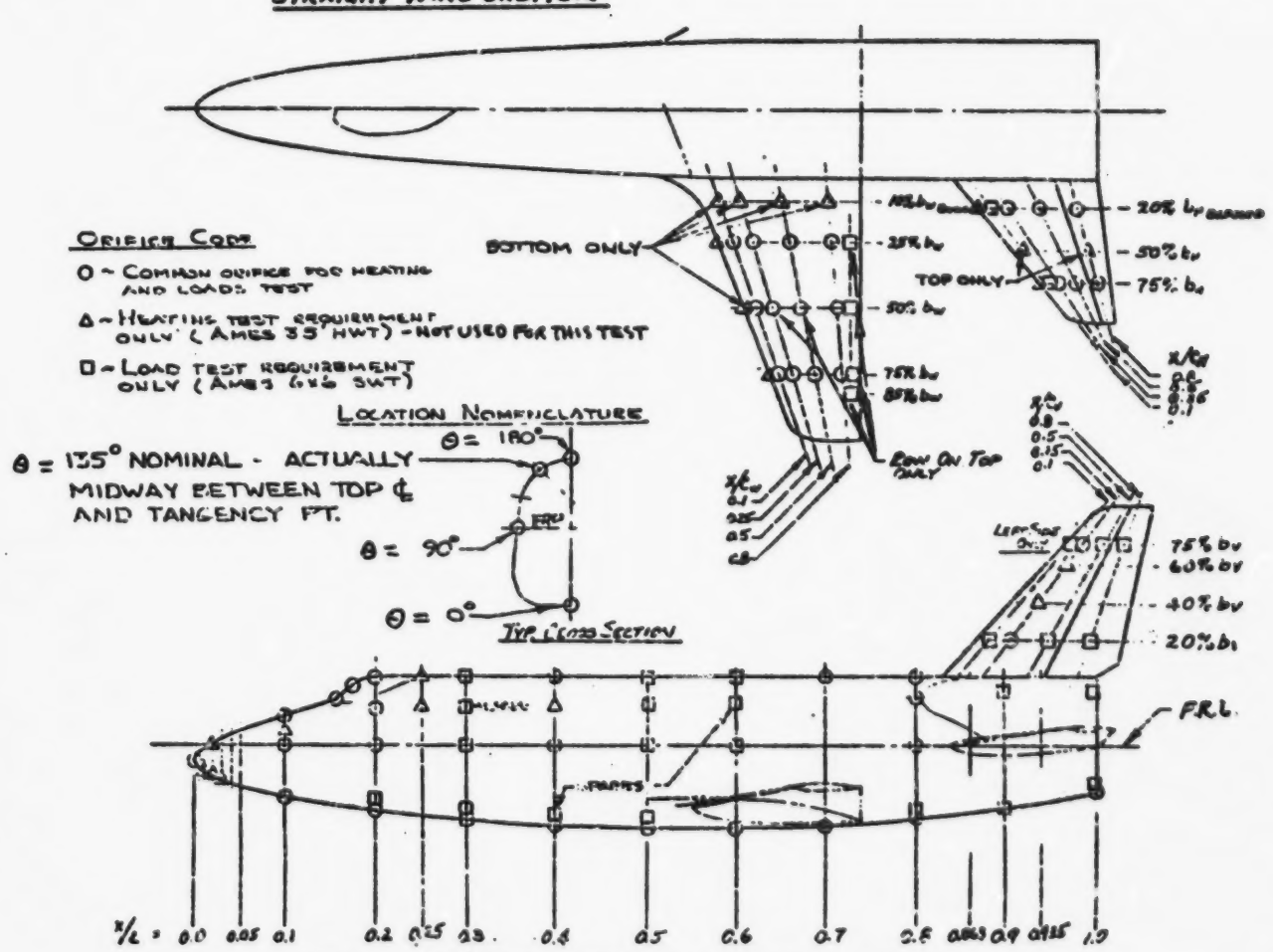

FIGURE 6 PRESSURE ORIFICE LOCATIONS, STRAIGHT WING ORBITER

STRAIGHT WING ORBITER
NR
DR#1129
B-2-5

APPENDIX B-3

MODEL FIGURES

LAUNCH AIRLOADS

PRECEDING PAGE BLANK NOT FILMED

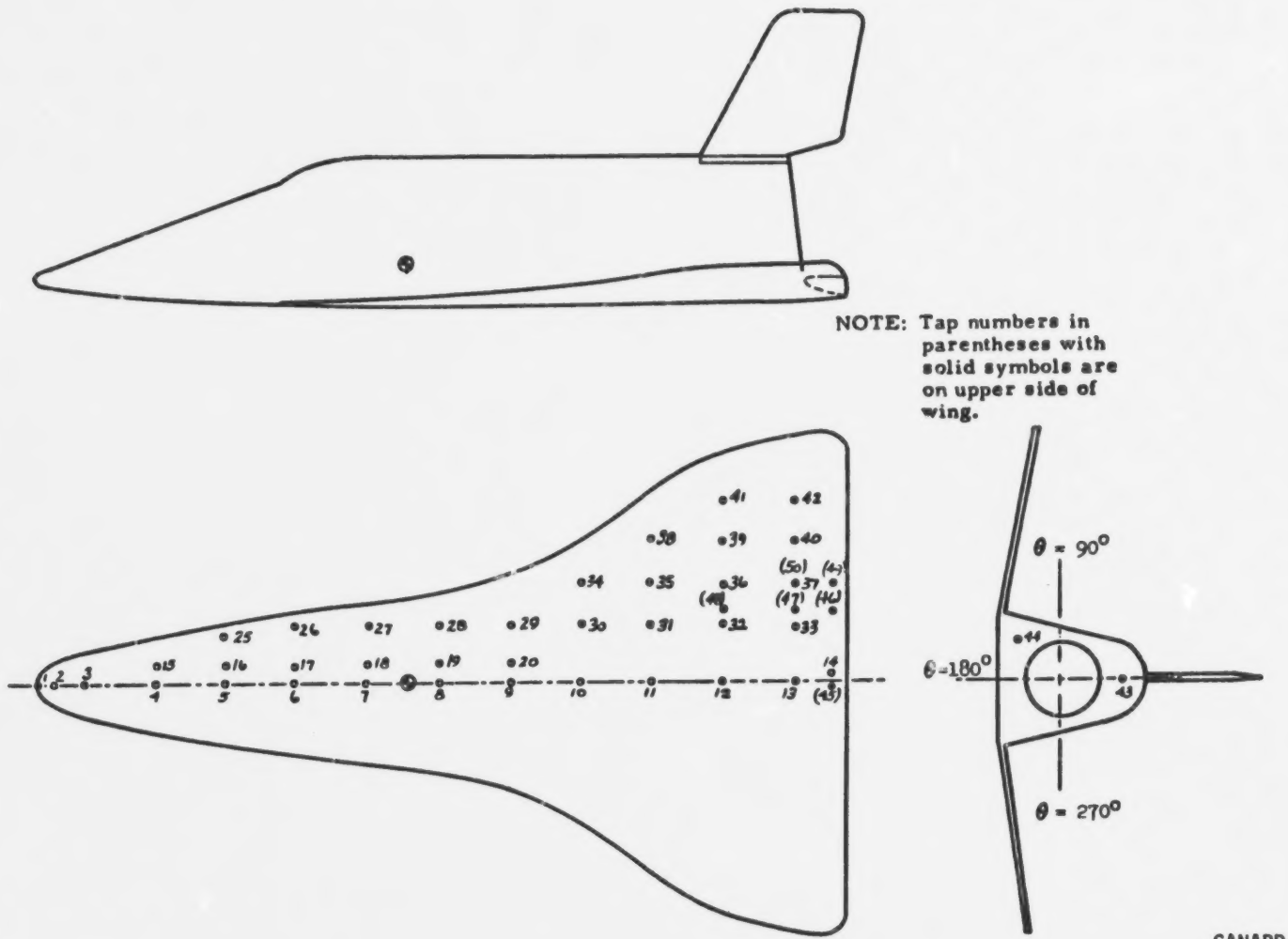

Fig. 1.- Pressure Tap Layout - Orbiter

CANARD BOOSTER
MDAC
DELTA WING ORBITER
MDAC
DR#1174-1 B-3-1

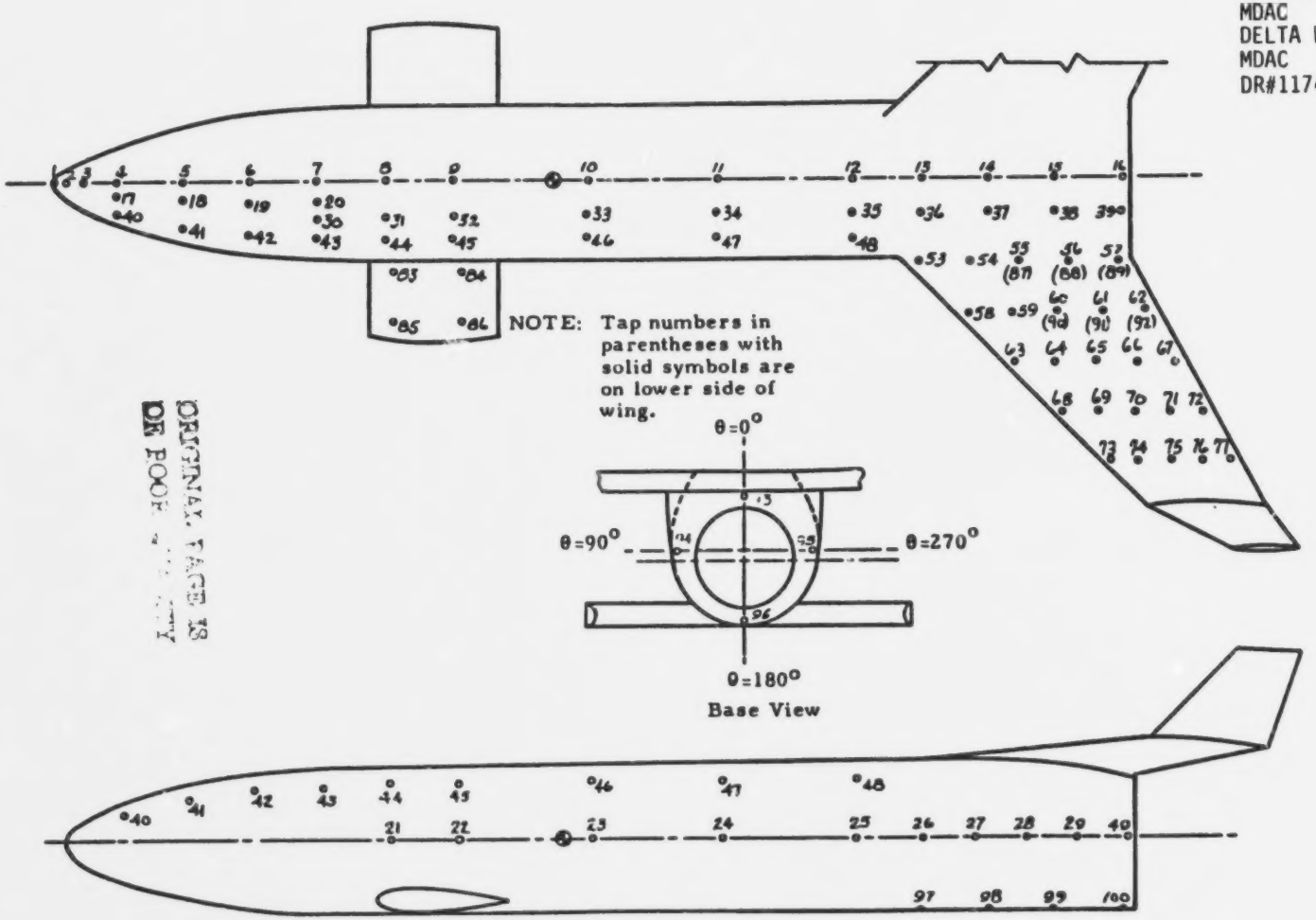

ORIGINAL PAGE IS
OF POOR QUALITY

Fig. 2 – Pressure Tap Layout - Booster

CYLINDRICAL BOOSTER
MSFC
DELTA WING ORBITER
LMSC
DR#1255-1 B-3-3

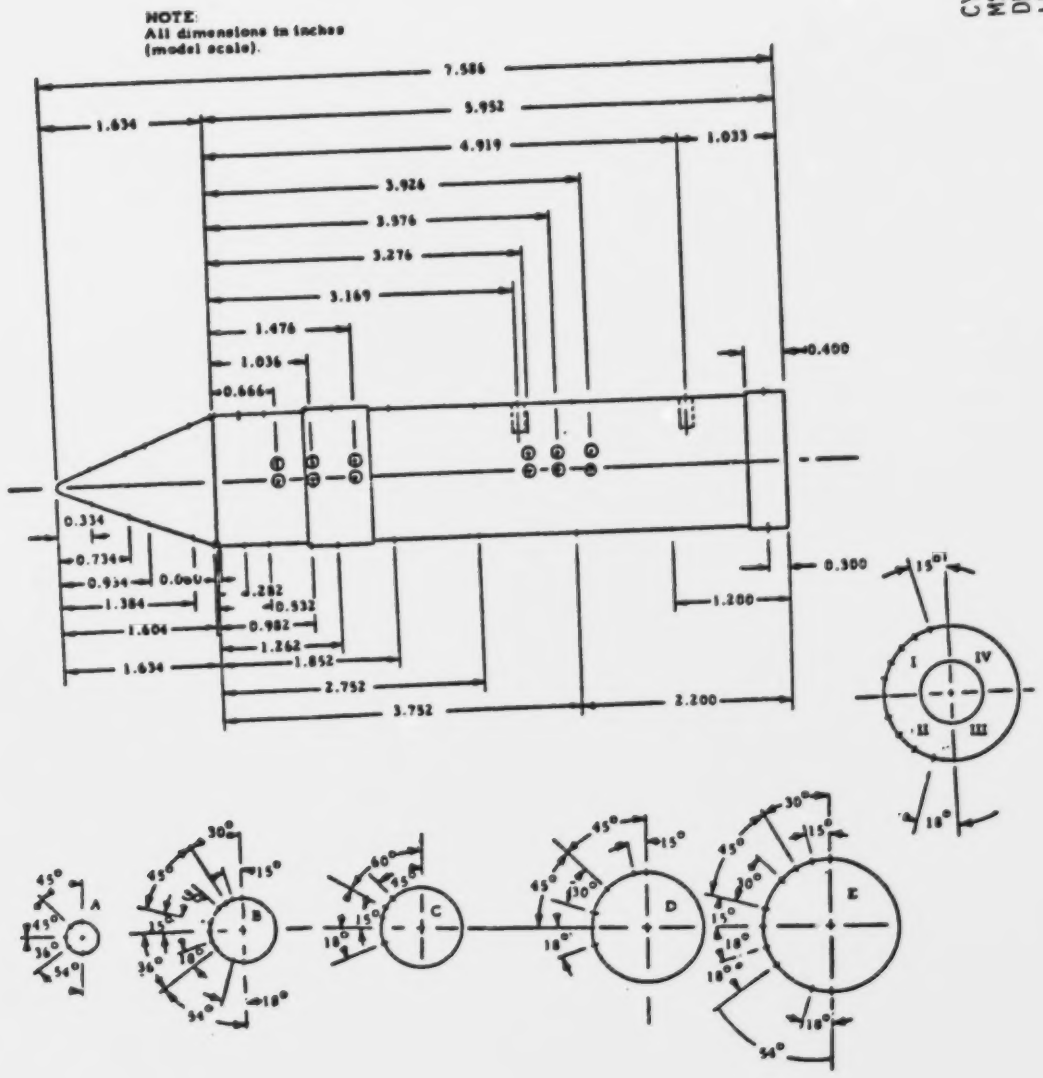

Fig. 4 - HO Tank Pressure Orifice Location

CYLINDRICAL BOOSTER
MSFC
DELTA WING ORBITER
LMSC
DR#1255-2 B-3-4

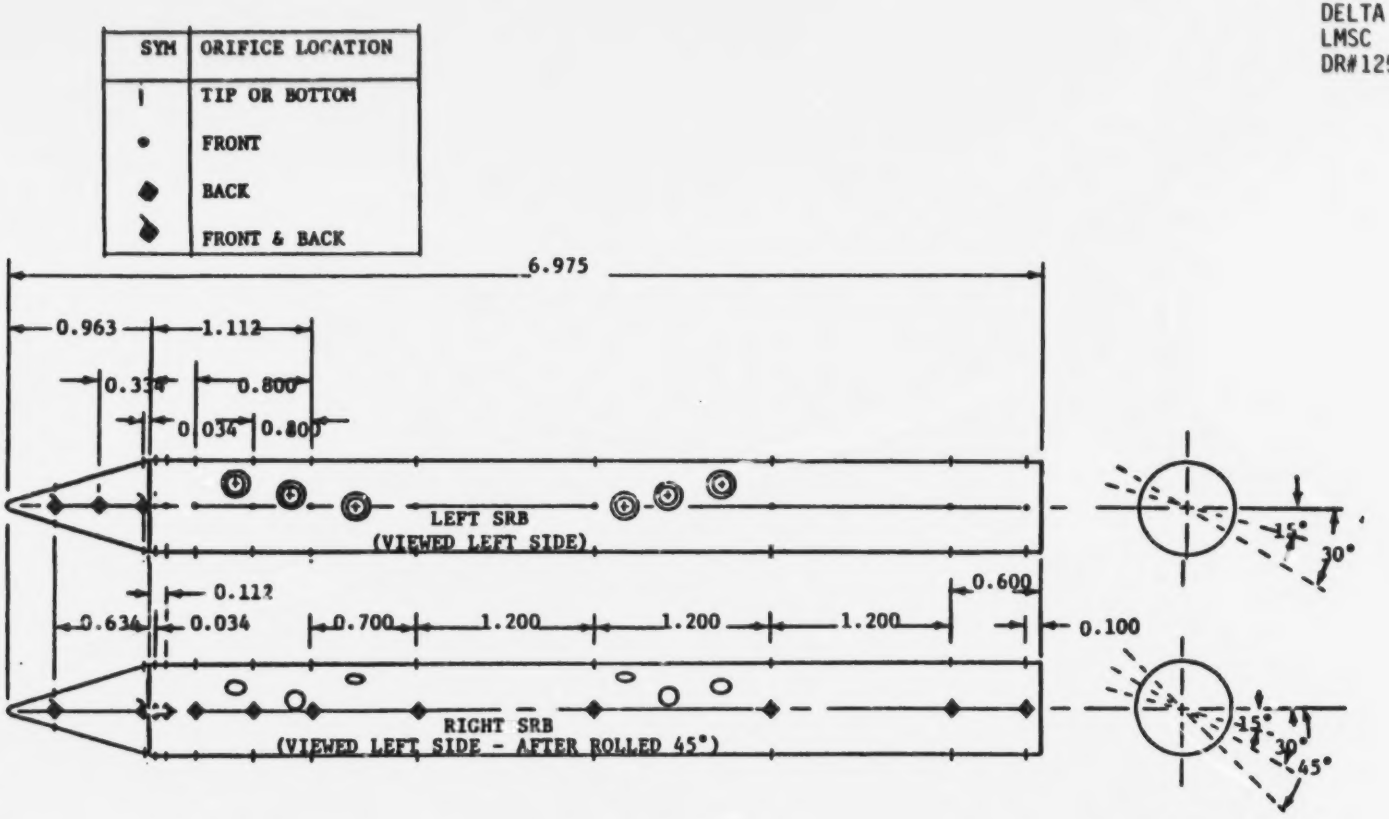

FIGURE 5. ORIFICE LOCATIONS ON SRB's

214
ORIGINAL PAGE IS
OF POOR QUALITY

CYLINDRICAL BOOSTER
MSFC
DELTA WING ORBITER
LMSC
DR#1255-3 B-3-5

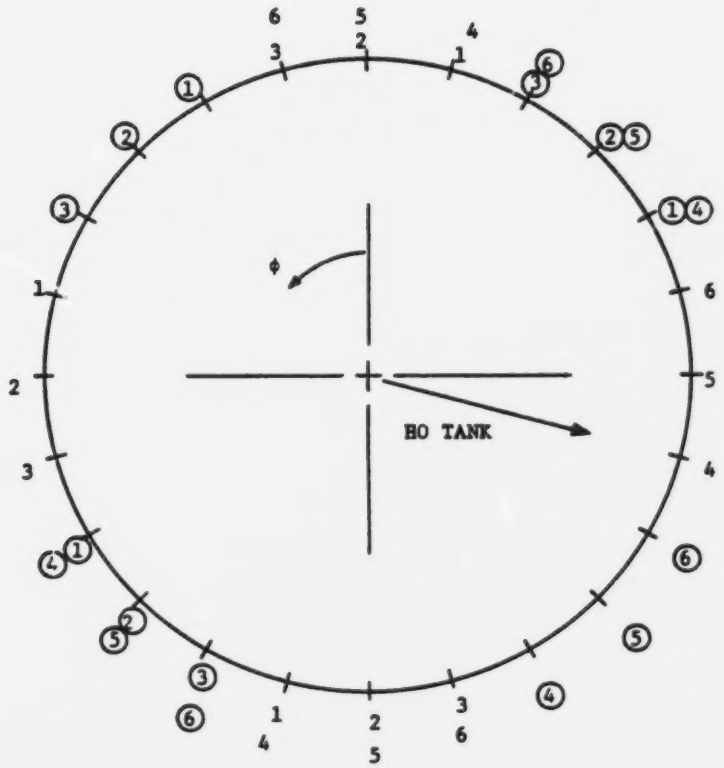

AFT VIEW (REFERENCED TO LEFT SRB)

1 = SRB POSITION I (LEFT SRB)
2 = SRB POSITION II
3 = SRB POSITION III
4 = SRB POSITION I + 180
5 = SRB POSITION II + 180
6 = SRB POSITION III + 180

NOTE: CIRCLED NUMBER, ③ , REPRESENTS ORIFICE LOCATED ON RIGHT SRB REFERRED TO THE LEFT SRB

FIGURE 6. COMPOSITE OF RADIAL LOCATIONS OF ORIFICES ON SRB FOR VARIOUS BOLT PATTERNS

CYLINDRICAL BOOSTER
MSFC
DELTA WING ORBITER
LMSC
DR#1255-3 B-3-5

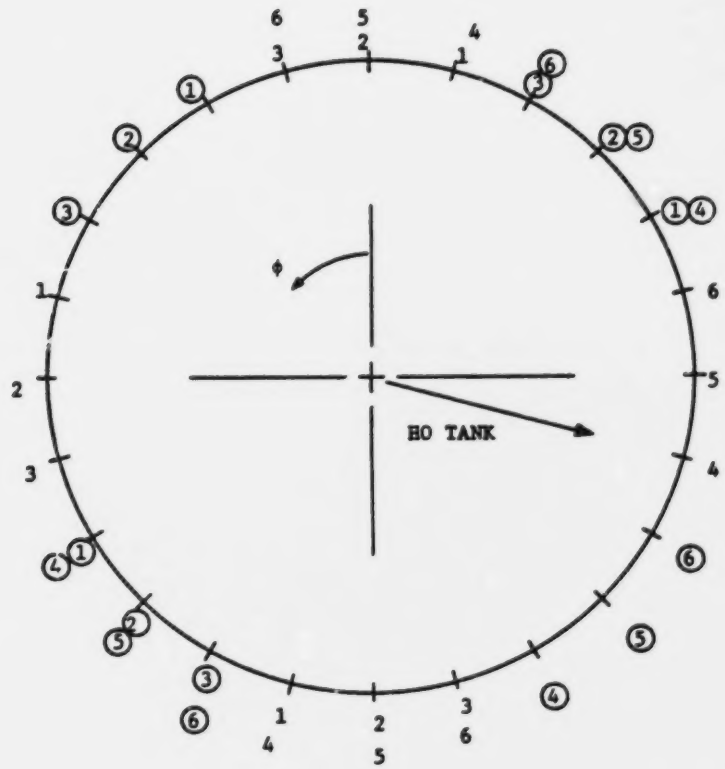

AFT VIEW (REFERENCED TO LEFT SRB)

1 = SRB POSITION I (LEFT SRB)
2 = SRB POSITION II
3 = SRB POSITION III
4 = SRB POSITION I + 180
5 = SRB POSITION II + 180
6 = SRB POSITION III + 180

NOTE: CIRCLED NUMBER, ③ , REPRESENTS ORIFICE LOCATED ON RIGHT SRB REFERRED TO THE LEFT SRB

FIGURE 6. COMPOSITE OF RADIAL LOCATIONS OF ORIFICES ON SRB FOR VARIOUS BOLT PATTERNS

CYLINDRICAL BOOSTER
MSFC
DELTA WING ORBITER
MSFC
DR#1273 B-3-6

Numbers in parenthesis are on the lower surface

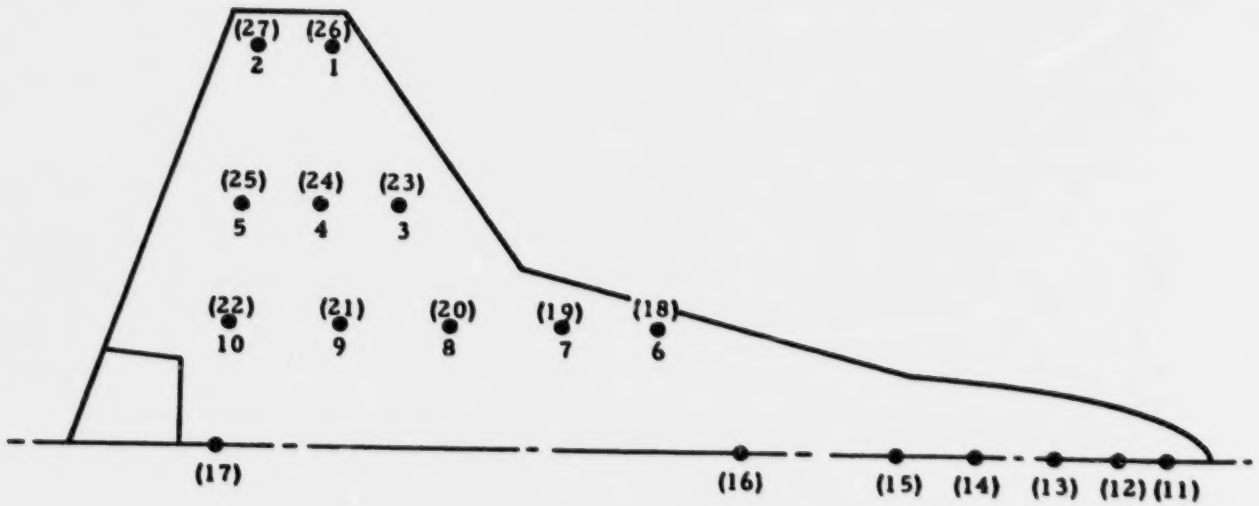

Fig. 4 - Static Pressure Tap Positions

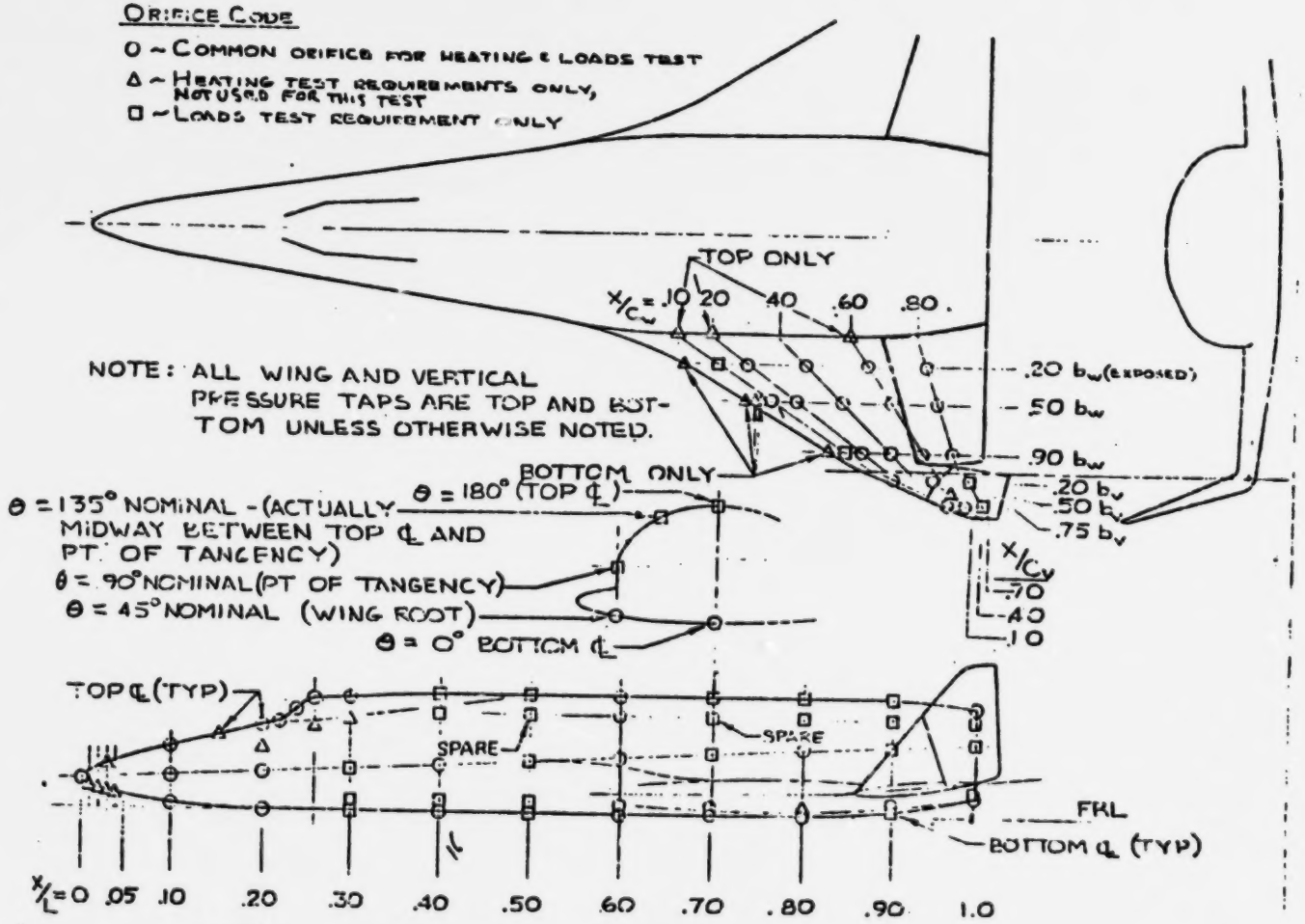

FIGURE 7 DELTA WING ORBITER PRESSURE ORIFICE LOCATIONS

ORIGINAL PAGE IS
OF POOR QUALITY

STRAIGHT WING BOOSTER
GD/C
DELTA WING ORBITER
NR
DR#1129-1 B-3-7

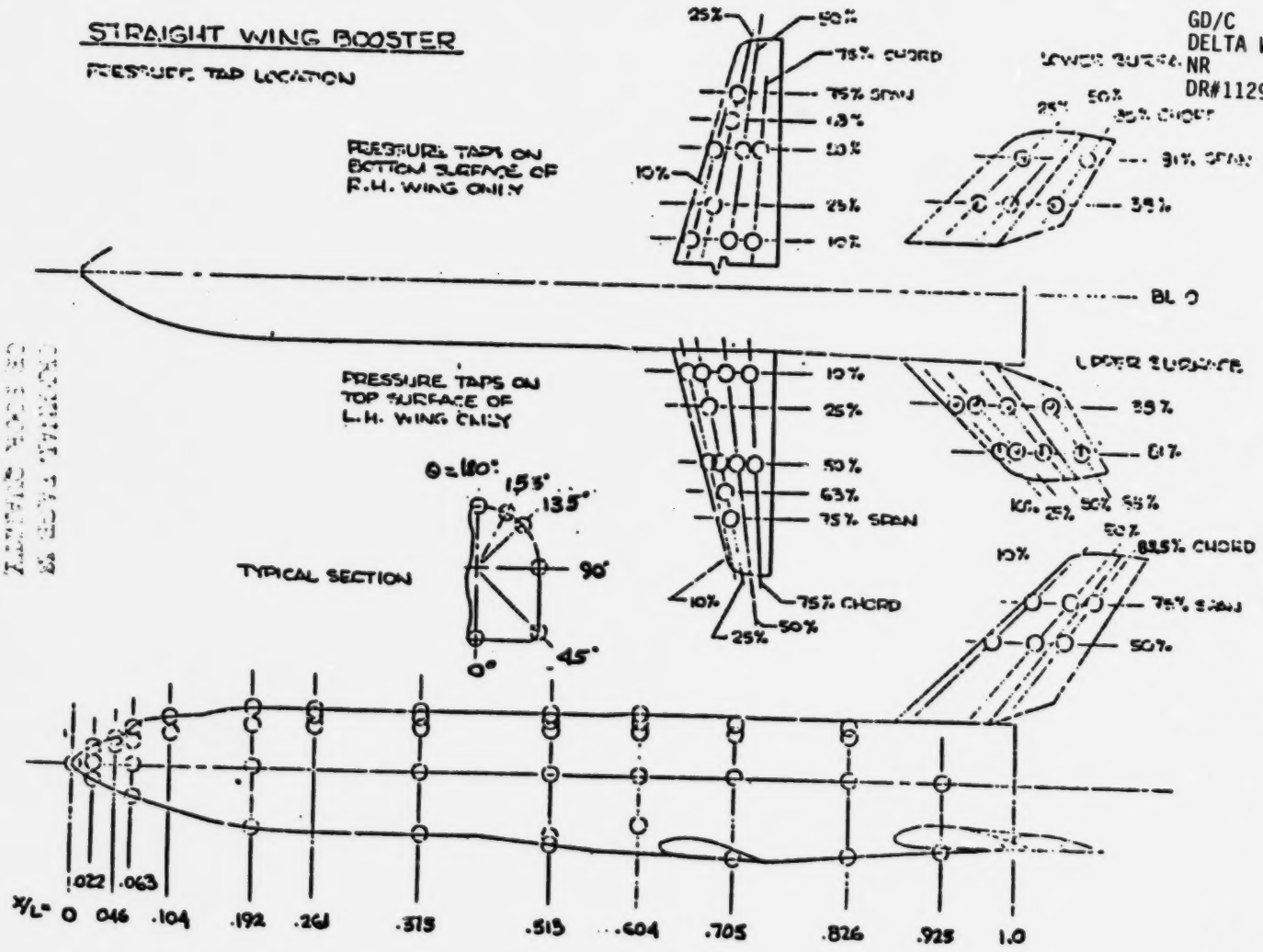

FIGURE 8 BOOSTER PRESSURE ORIFICE LOCATIONS

STRAIGHT WING ORBITER

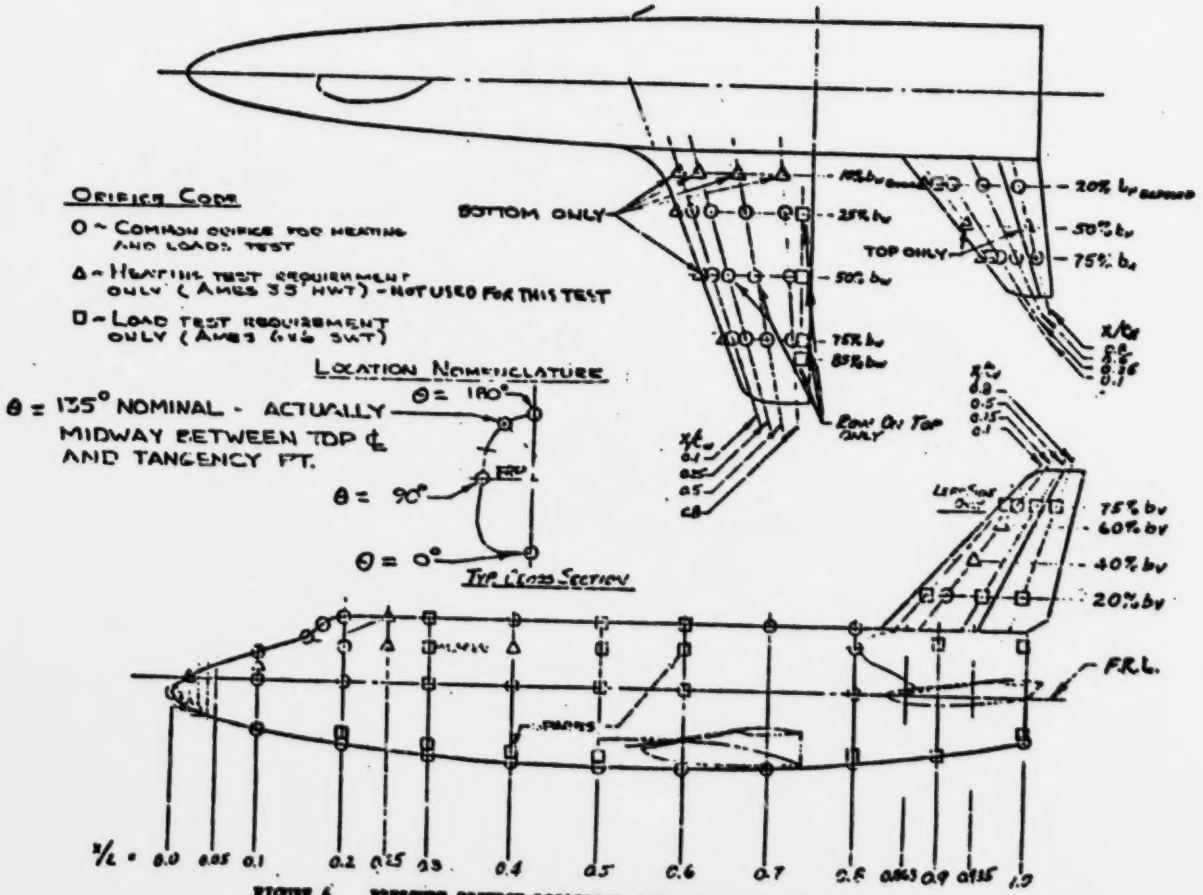

FIGURE 6 PRESSURE ORIFICE LOCATIONS, STRAIGHT WING ORBITER

STRAIGHT WING BOOSTER
GD/C
STRAIGHT WING ORBITER
NR
DR#1129-1 B-3-9

STRAIGHT WING BOOSTER
GD/C
STRAIGHT WING ORBITER
NR
DR#1129-1 B-3-10

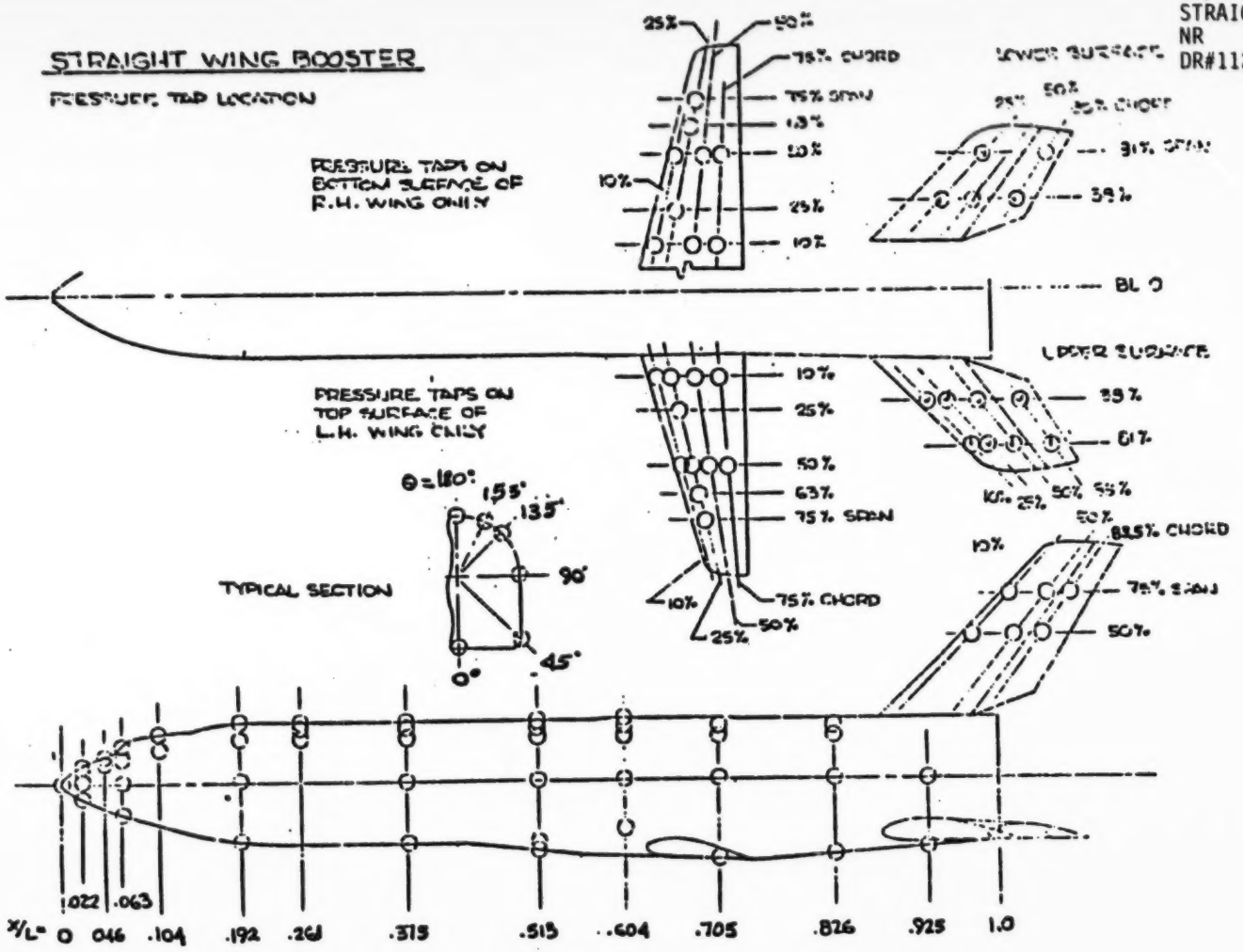

FIGURE 8 BOOSTER PRESSURE ORIFICE LOCATIONS

ORIGINAL PAGE IS
OE POOR QUALITY

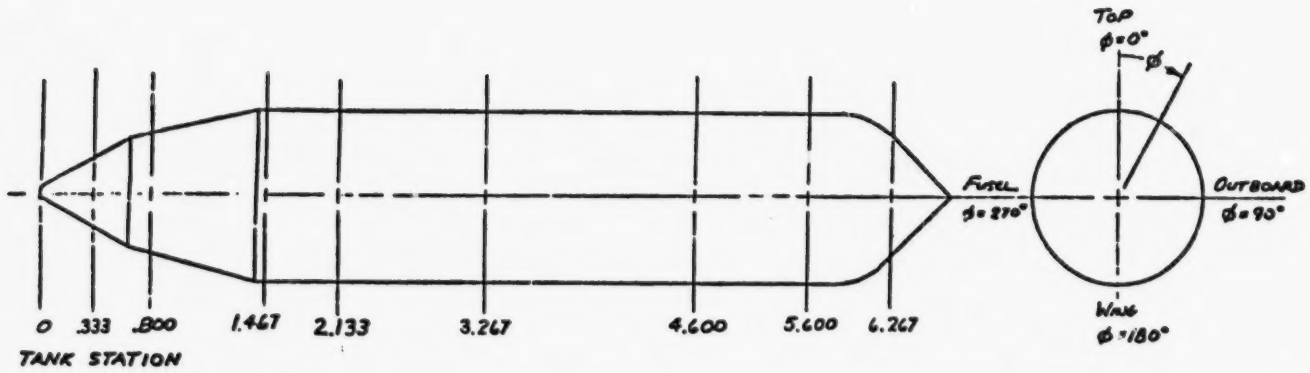

TANK STATION	NO. OF TAPS	TAP NOS.	PRESSURE TAP LOCATIONS (ϕ in DEG.)
0.333	4	2-5	0, 90, 180, 270
0.800	8	6-13	0, 45, 90, 135, 180, 225, 270, 315
1.467	8	14-21	0, 45, 90, 135, 180, 225, 270, 315
2.133	8	22-29	0, 45, 90, 135, 180, 225, 270, 315
3.267	4	30-33	0, 90, 180, 270
4.600	6	34-39	0, 45, 90, 135, 180, 270
5.600	4	40-43	0, 90, 180, 270
6.267	2	44-45	0, 180
TOTAL	44 TAPS		

(b) PRESSURE TAP LOCATIONS

FIGURE D. – concluded.

STRAIGHT WING BOOSTER
TBC
UNIQUE CONFIG. ORBITER
GAC
DR#1136 B-3-11

APPENDIX C-1

MODEL FIGURES

BOOSTER HEAT TRANSFER

FIGURE 8 BOOSTER INSTRUMENTATION LOCATIONS

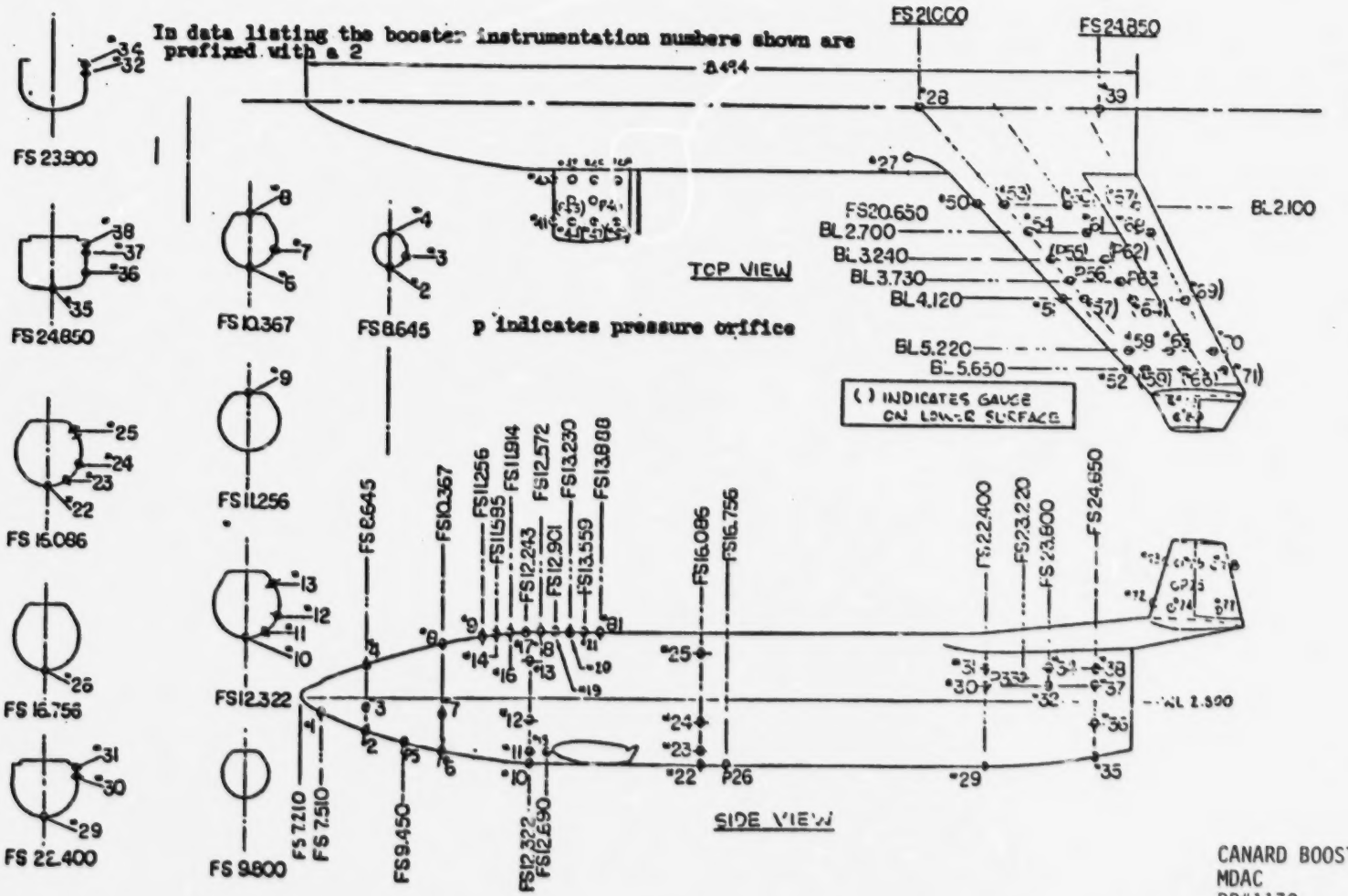

CANARD BOOSTER
MDAC
DR#1170
C-1-1

ORIGINAL PAGE IS
OF POOR QUALITY

224 PRECEDING PAGE BLANK NOT FILMED

ORIGINAL PAGE IS
OF POOR QUALITY

GD/C
DR#1098
C-1-2

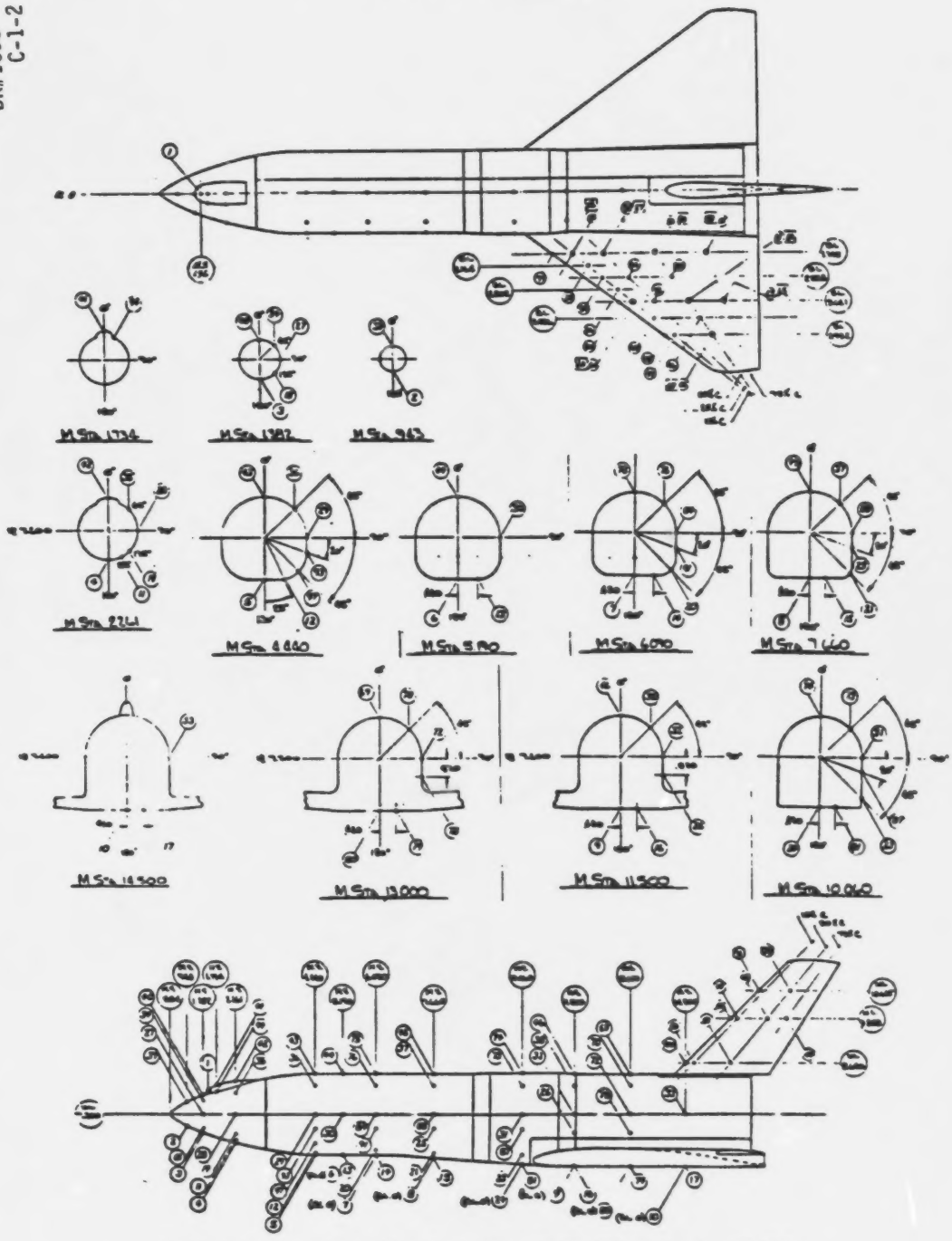

Figure 5. Thermocouples Location - Delta Wing Booster Model

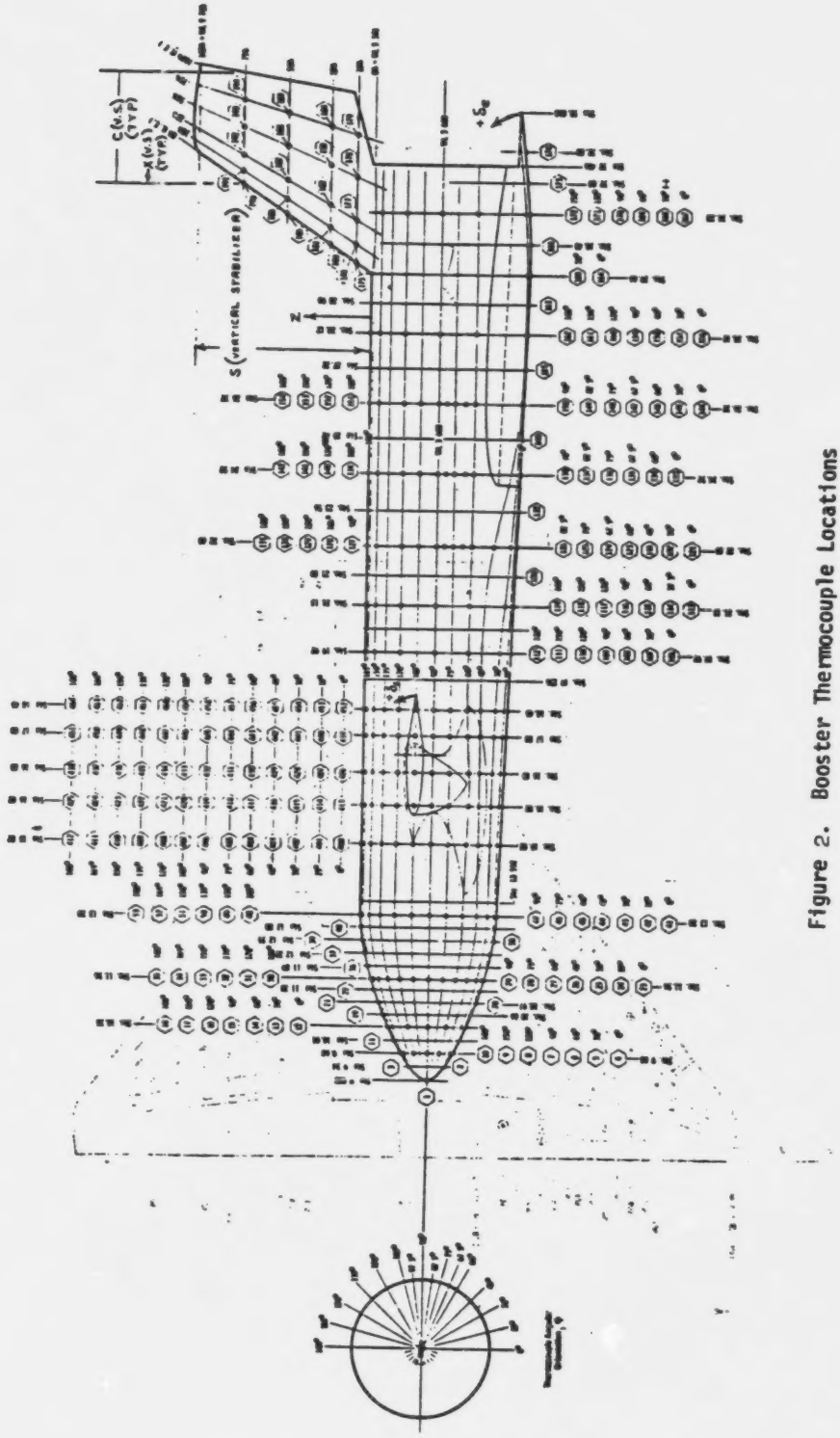

Figure 2. Booster Thermocouple Locations

ORIGINAL PAGE IS
OF POOR QUALITY

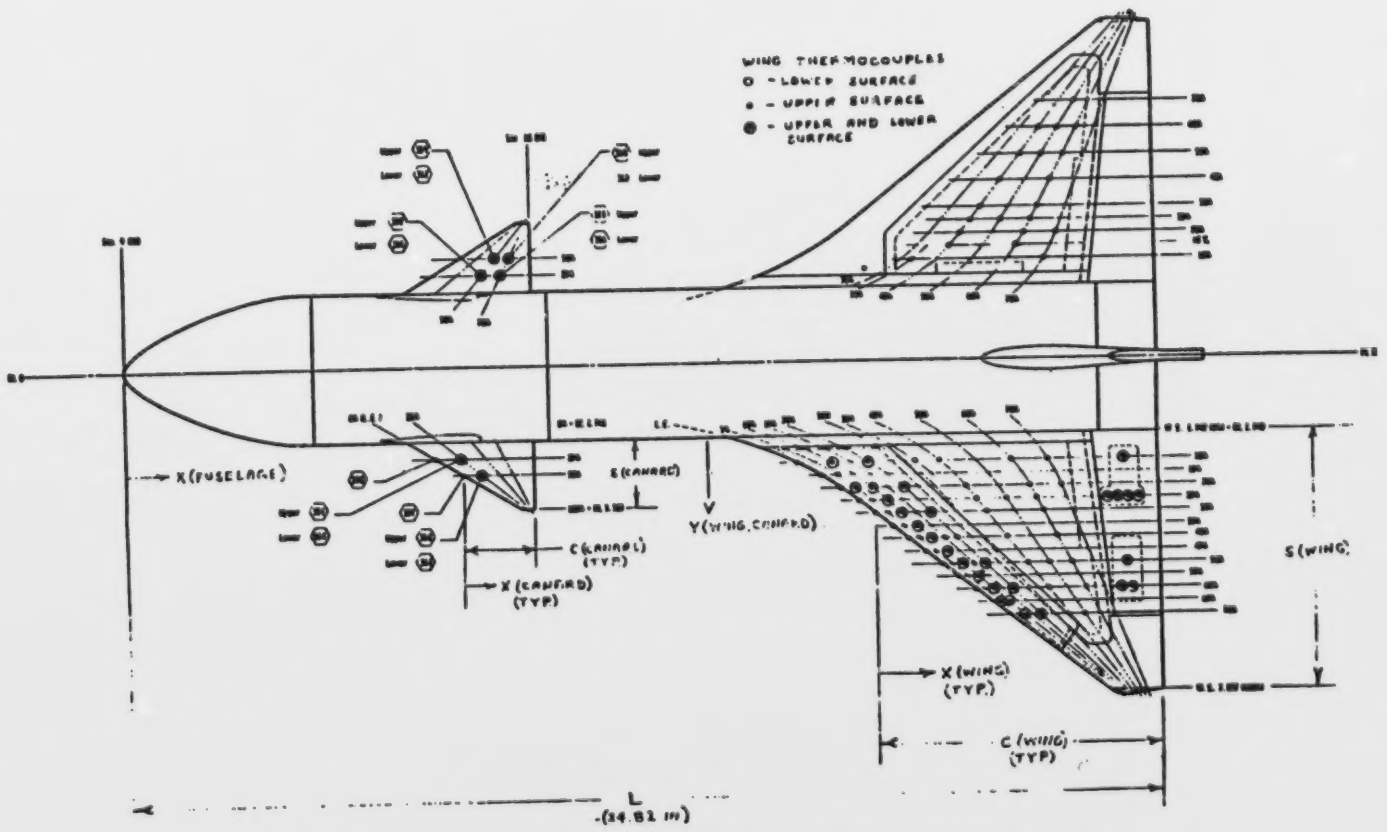

Figure 2. Continued

ORIGINAL PAGE IS
OF POOR QUALITY

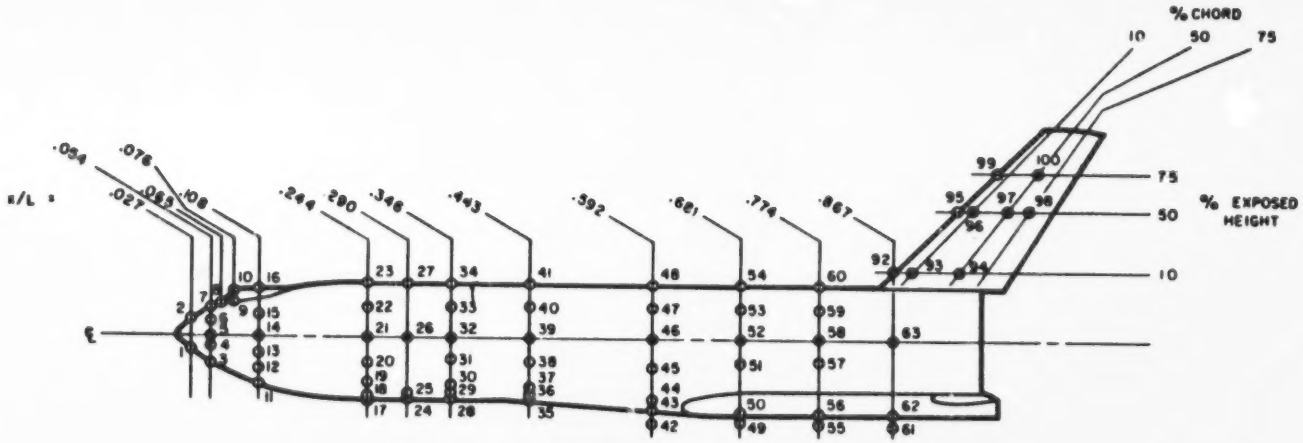

(a) Body and vertical tail.

Figure 3.- Thermocouple locations on delta-wing booster model.

DELTA WING BOOSTER
GD/C
DR#1179-1
C-1-5

CONFIDENTIAL
SECURITY CLASSIFICATION

T - TOP SURFACE
B - BOTTOM SURFACE
● - FILLED SYMBOL - BOTH TOP & BOTTOM

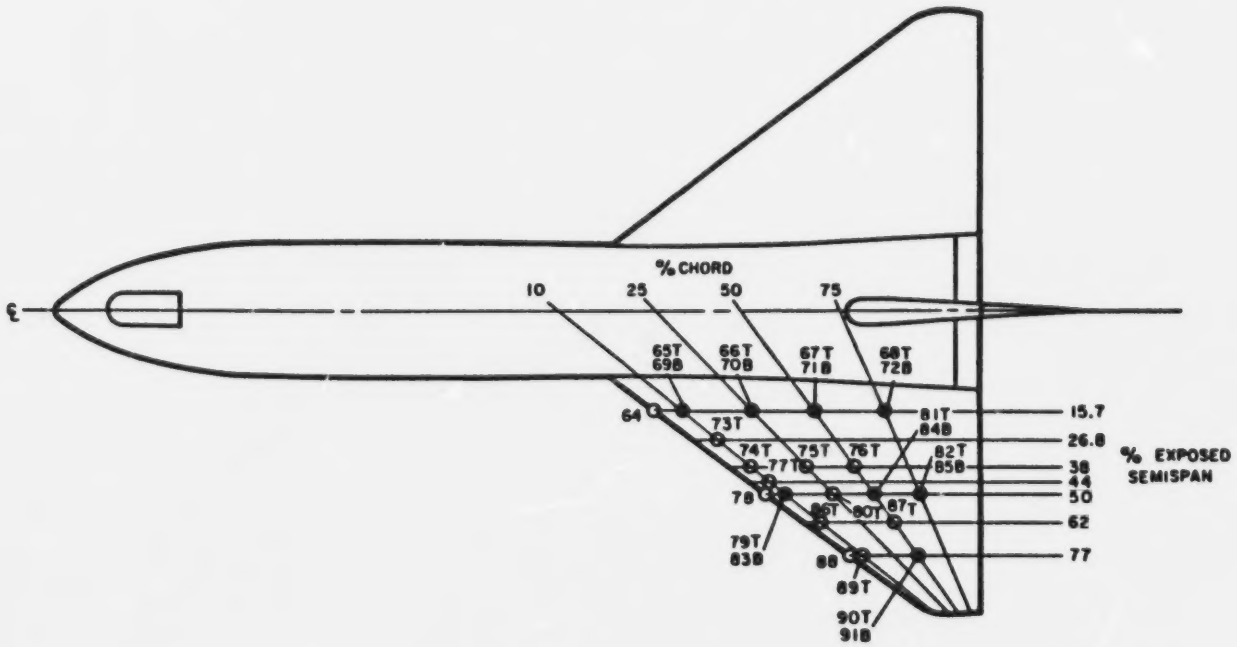

(b) Wing.

Figure 3.- Continued.

ORIGINAL PAGE IS
OF POOR QUALITY

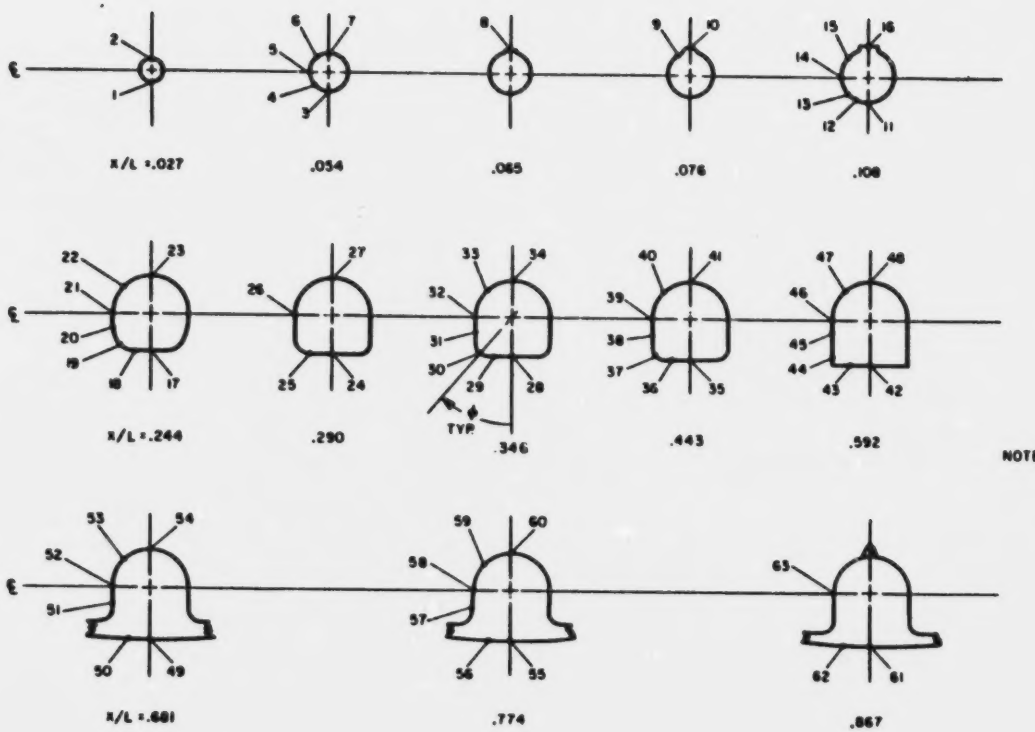

(c) Body cross sections.

Figure 3.- Concluded.

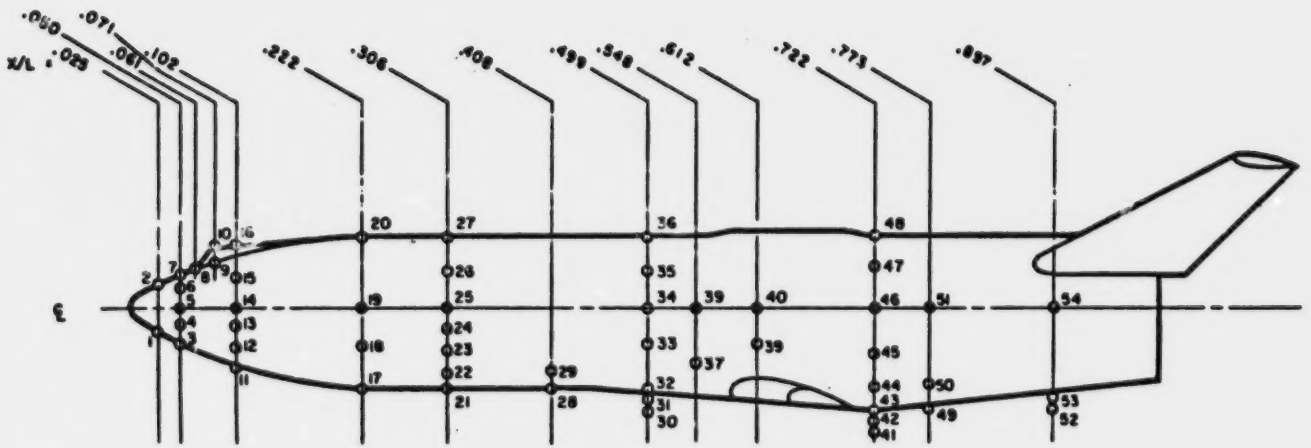

(a) Body.

Sketch 2.- Thermocouple locations on straight-wing booster model.

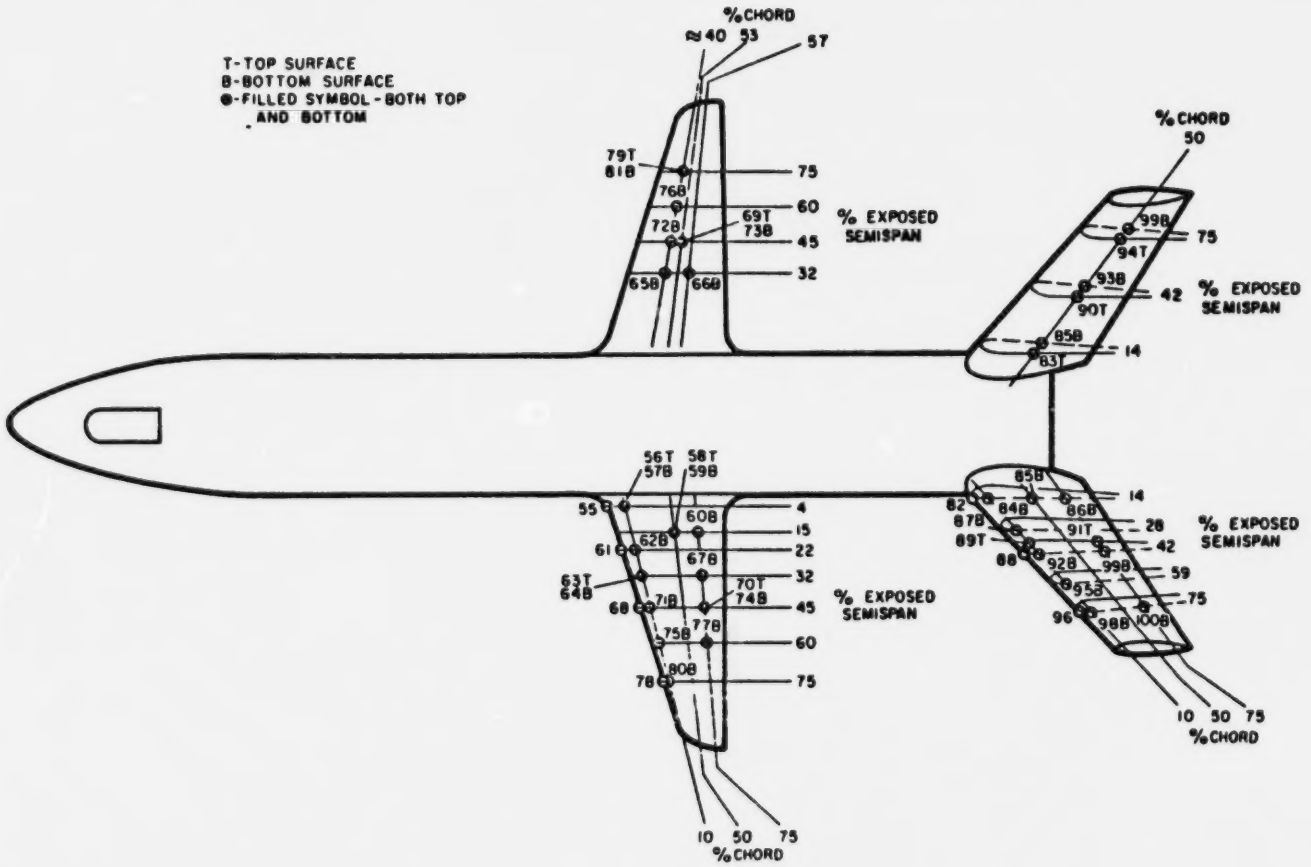

(b) Wing and vee tail.

Sketch 2.- Continued

STRAIGHT WING BOOSTER
GD/C
DR#1134-2
C-1-9

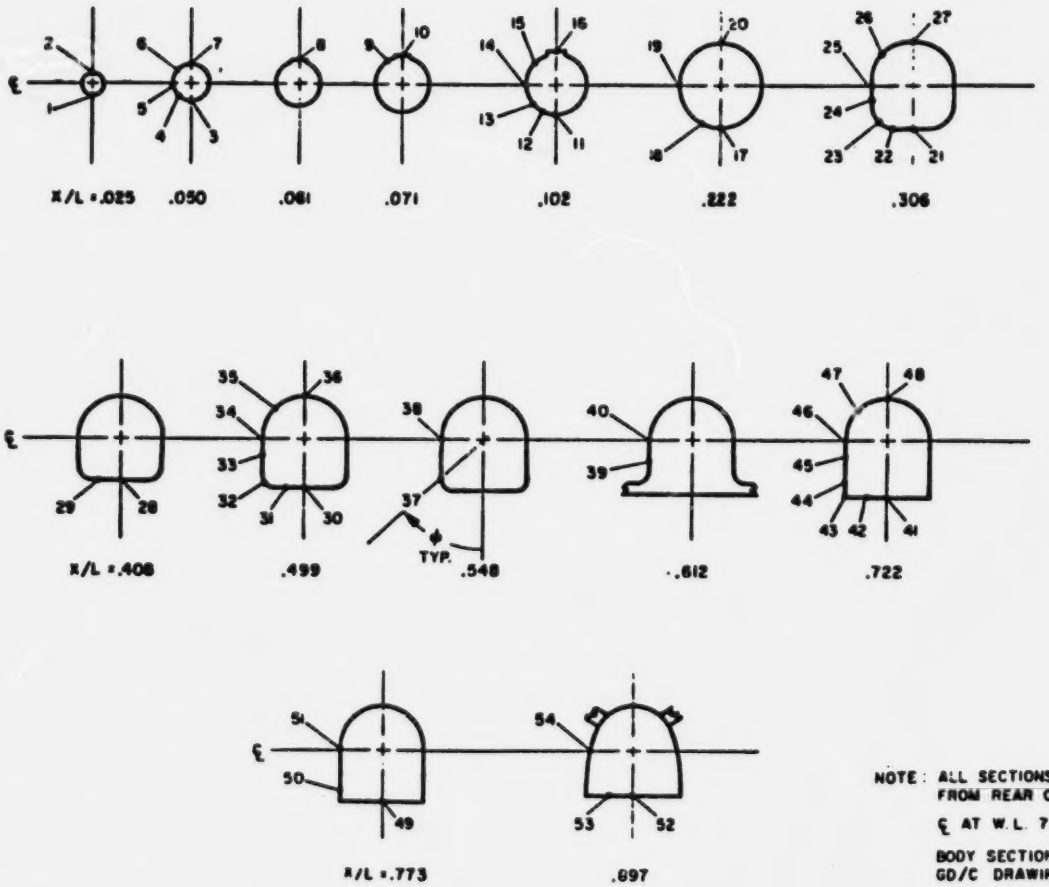

(c) Body cross sections.

Sketch 2.- Concluded

APPENDIX C-2

MODEL FIGURES

ORBITER HEAT TRANSFER

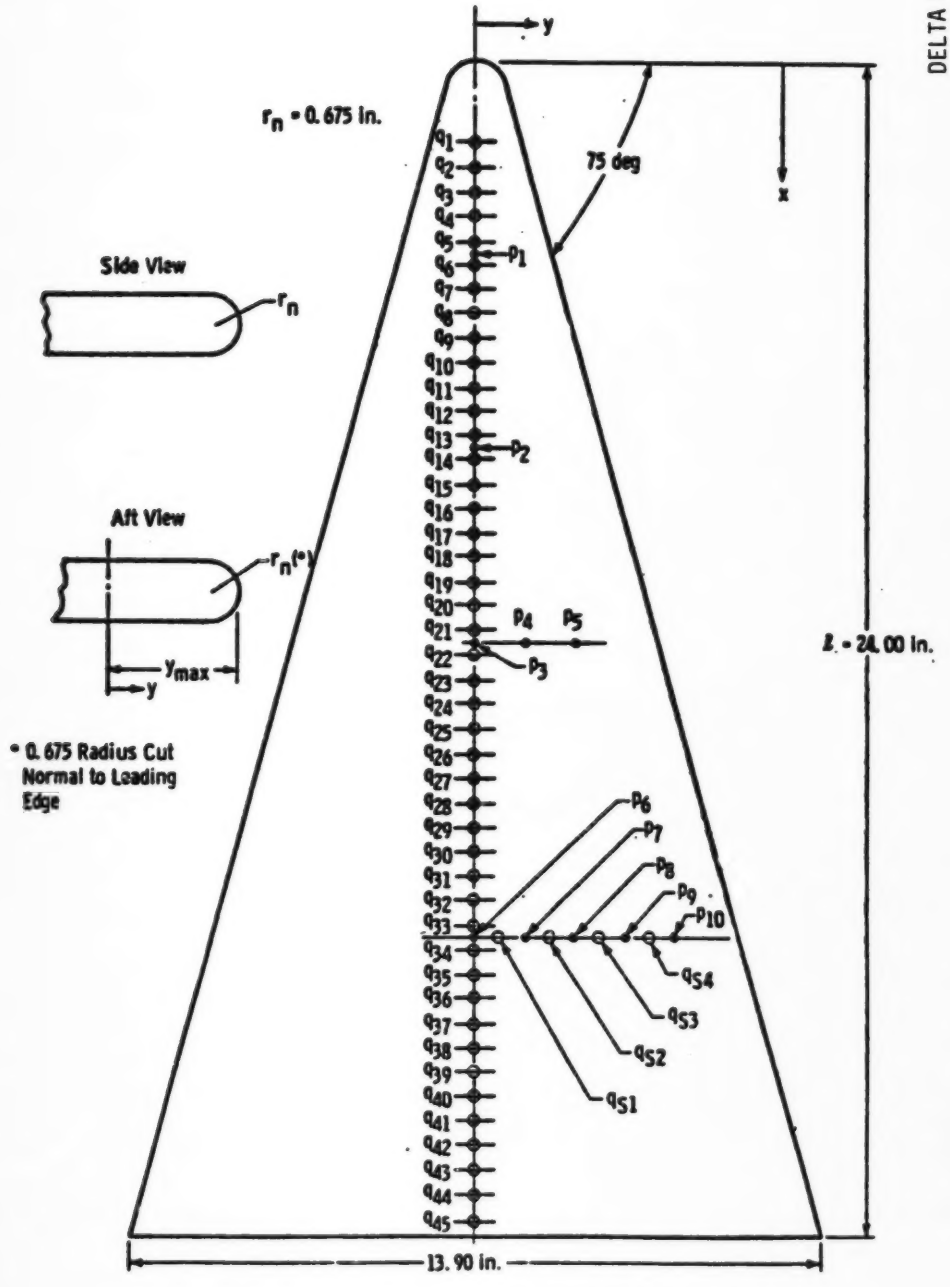

a. LRC-DB Model, Configuration 9

Fig. 3 Instrumentation Layout for the Tunnel F Langley Models

PRECEDING PAGE BLANK NOT FILMED

DELTA WING ORBITER
GAC
DR#1146
C-2-2

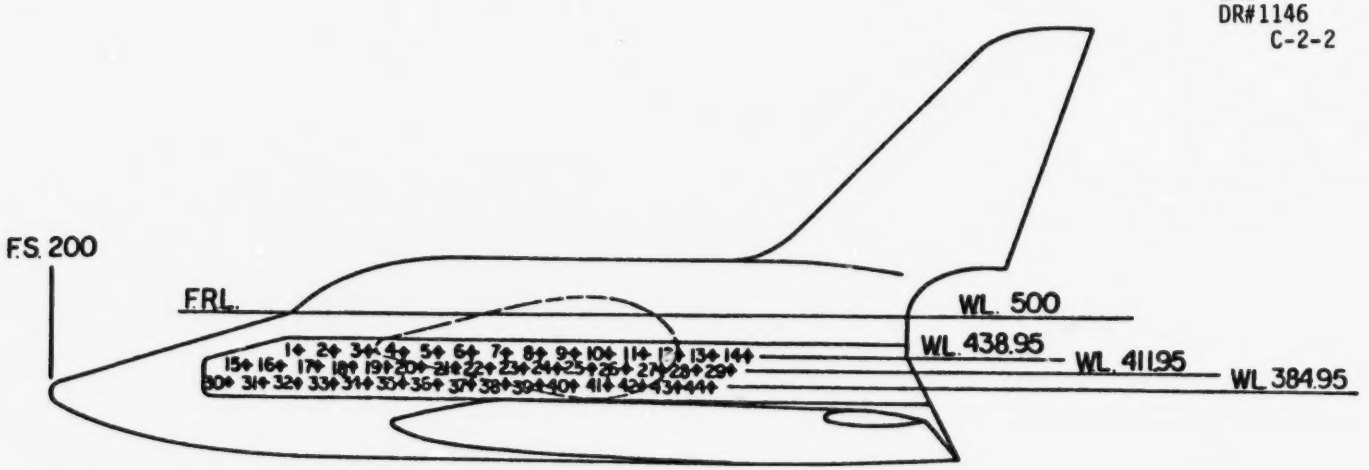

• FOR THERMOCOUPLE COORDINATES, SEE TABLE 3.

• BROKEN LINE INDICATES AREA COVERED BY CONTOURED NOSE TANK FAIRING.

FIGURE 4. FUSELAGE THERMOCOUPLE LOCATIONS

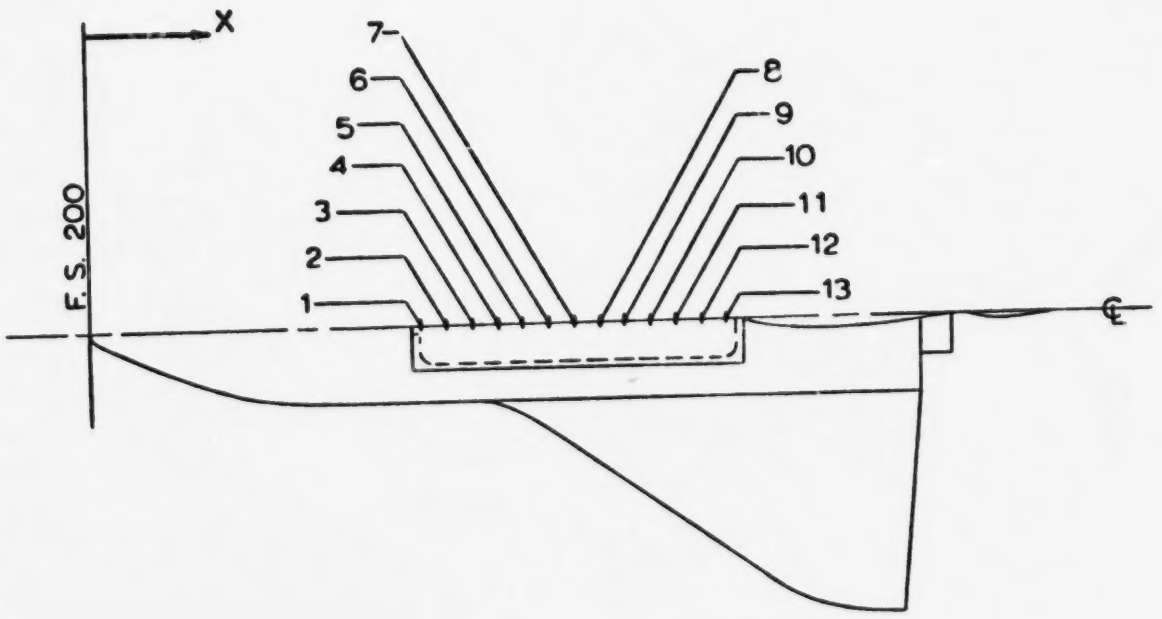

FIGURE 1. ORBITER THERMOCOUPLE LOCATIONS (UPPER SURFACE)

DELTA WING ORBITER
GAC
DR#1234-1
C-2-3

DELTA WING ORBITER
GAC
DR#1234-2
C-2-4

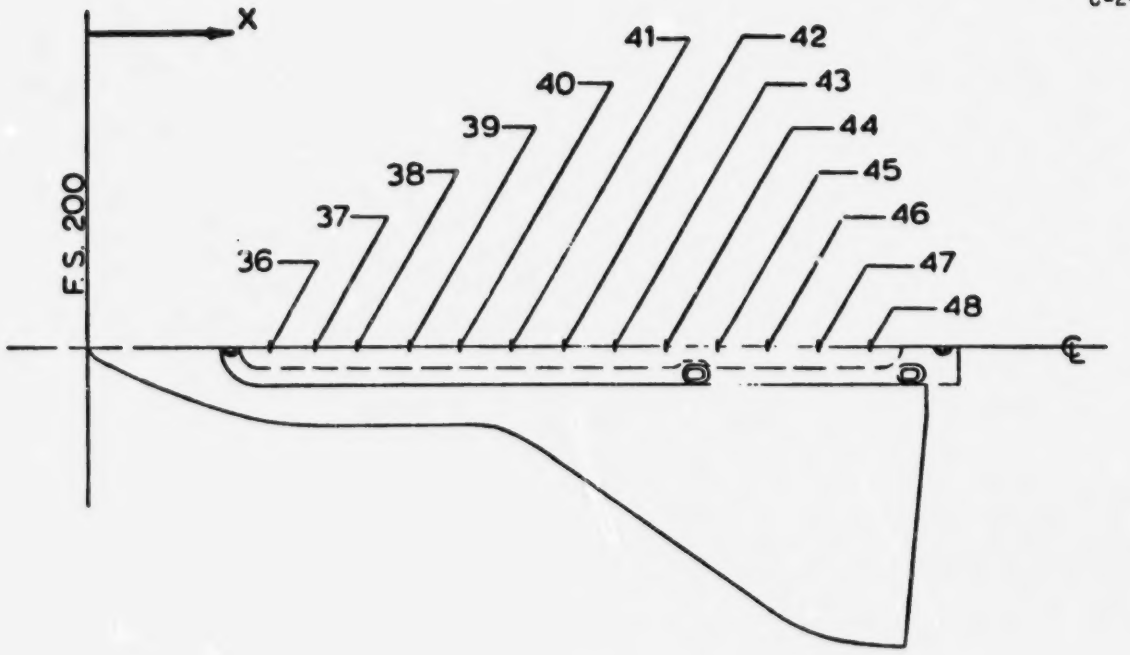

FIGURE 2. ORBITER THERMOCOUPLE LOCATIONS (LOWER SURFACE)

FIGURE 7 ORBITER INSTRUMENTATION LOCATIONS

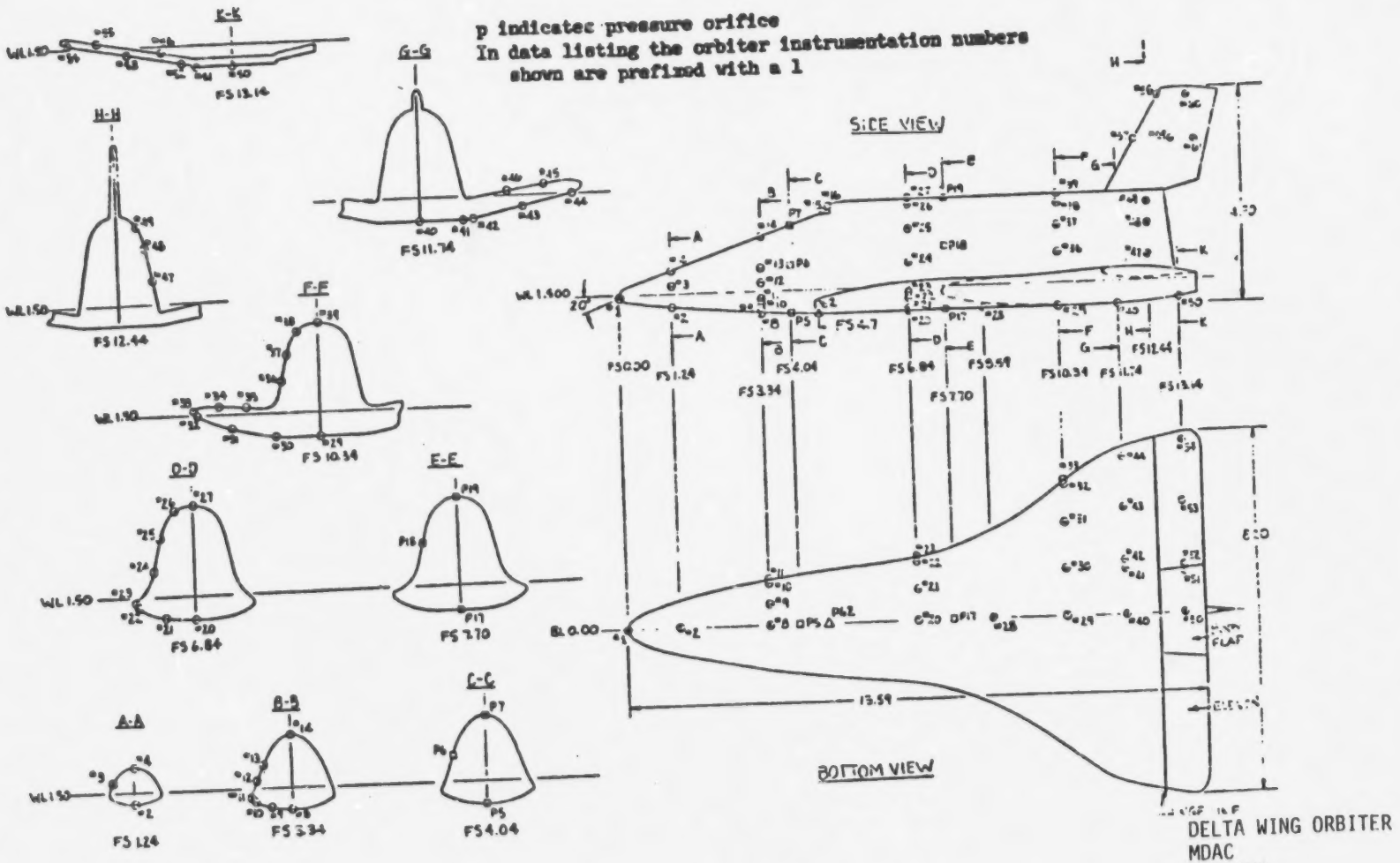

ORIGINAL PAGE IS
OF POOR QUALITY

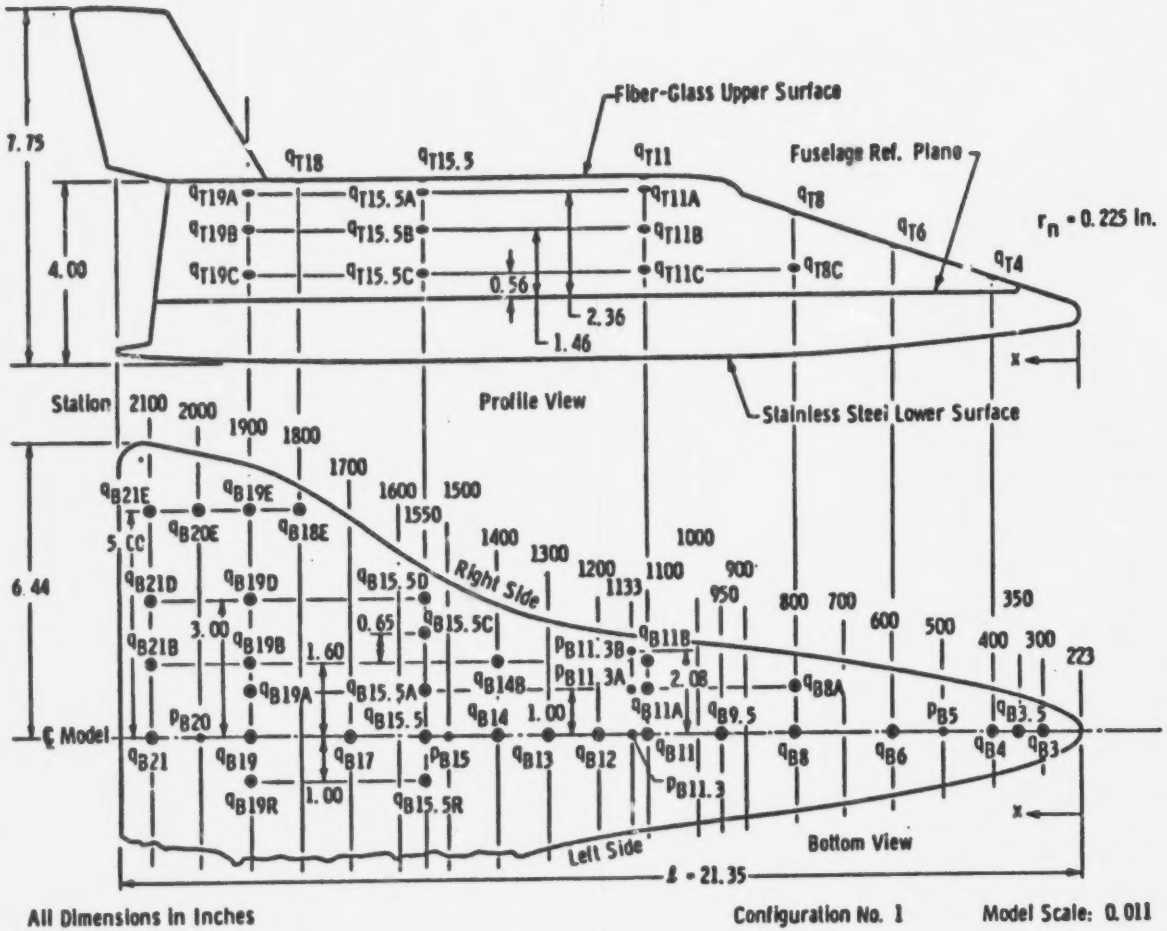

McDonnell Douglas Delta Wing Orbiter Model

Fig. 3 Instrumentation Layout for the Tunnel F MDAC-DWO Model

ORIGINAL PAGE IS
OF POOR QUALITY

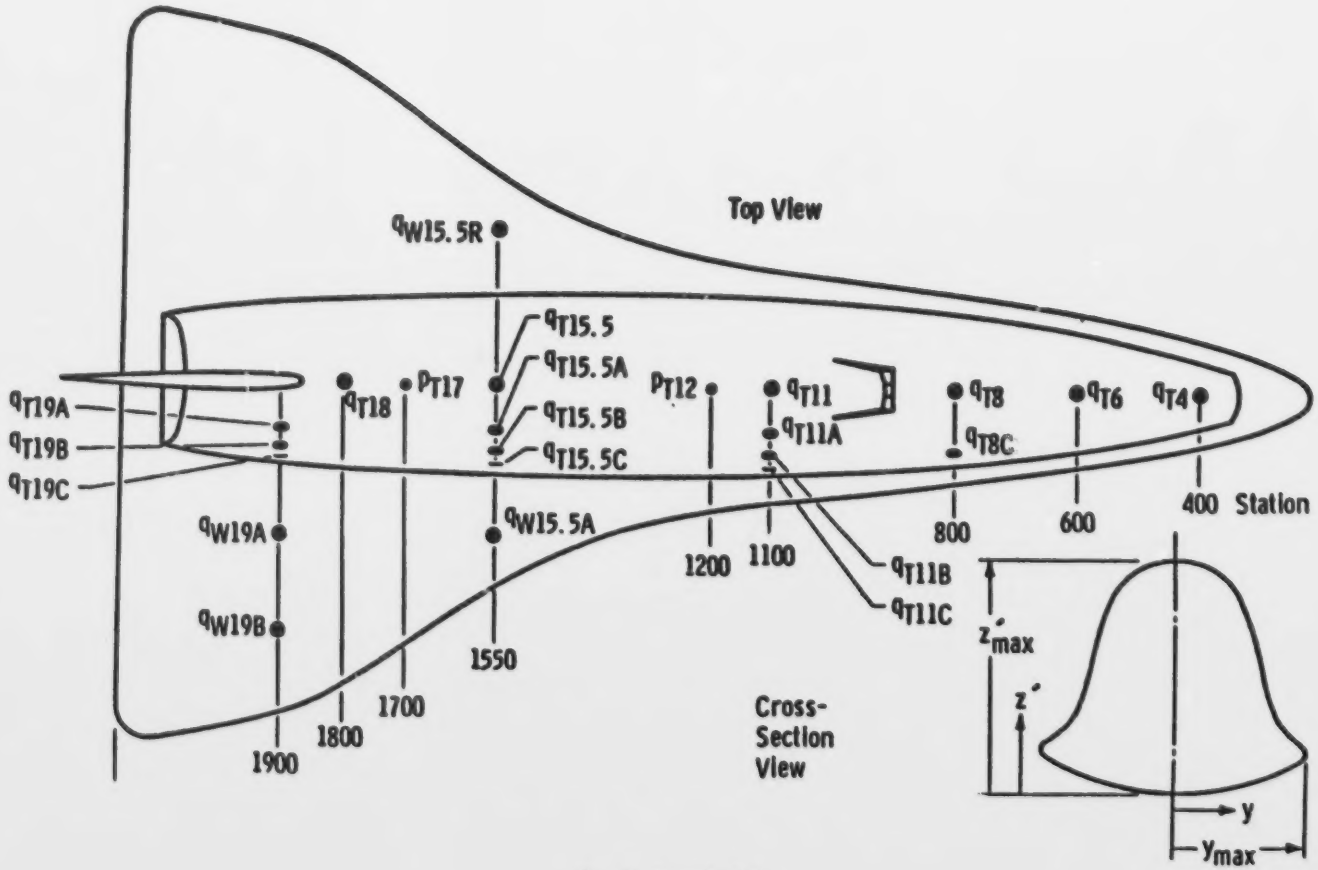

Fig. 3 Concluded

DELTA WING ORBITER
MDAC
DR#1206-2
C-2-7

DELTA WING ORBITER
NR
DR#1098
C-2-8

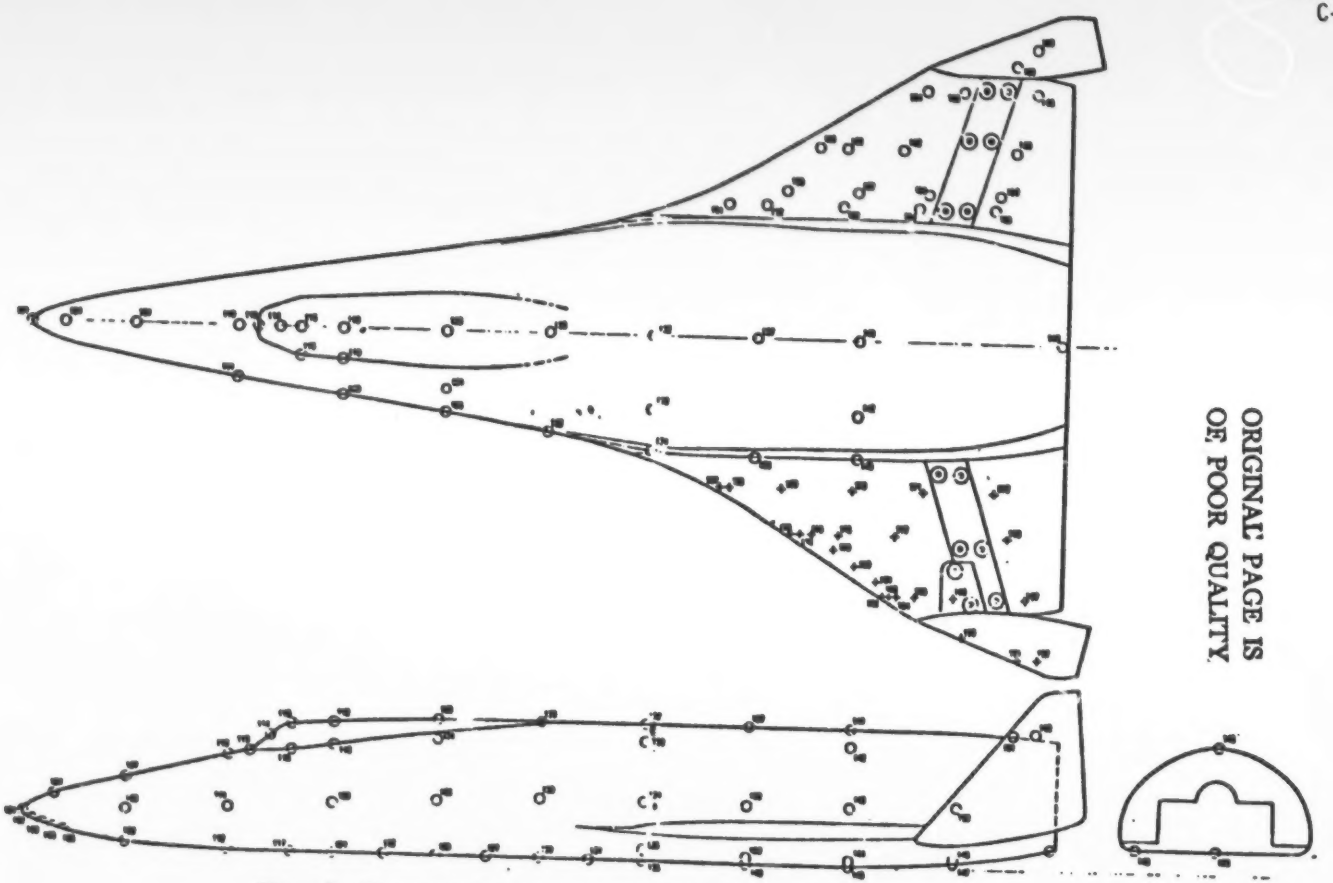

Figure 7. Thermocouples Location - Delta Wing Orbiter Model

ORIGINAL PAGE IS
OF POOR QUALITY

ORIGINAL PAGE IS
OF POOR QUALITY

DELTA WING ORBITER
NR
DR#1177-1
C-2-9

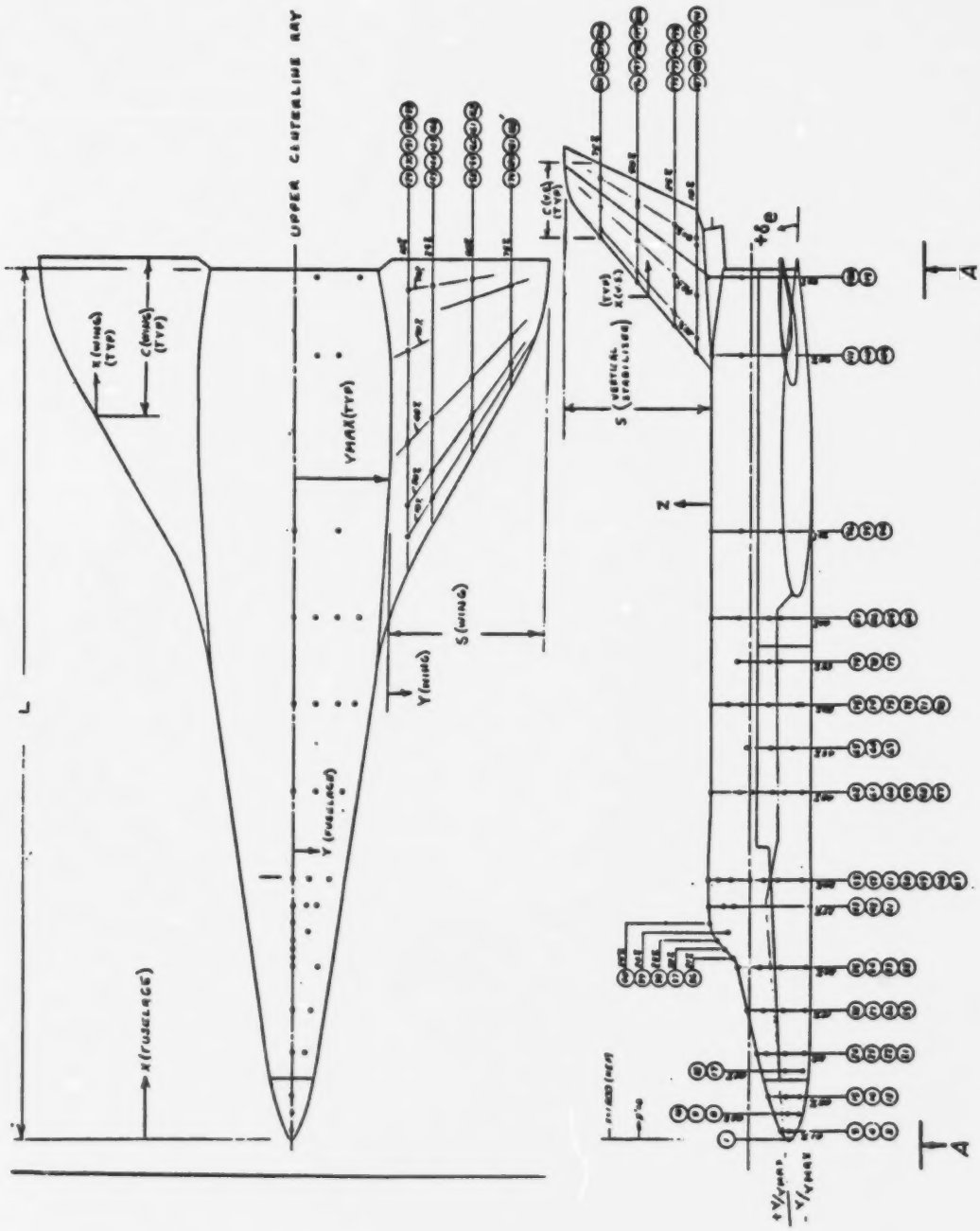

Figure 2 Orbiter Thermocouple Locations

DELTA WING ORBITER
NR
DR#1177-2
C-2-10

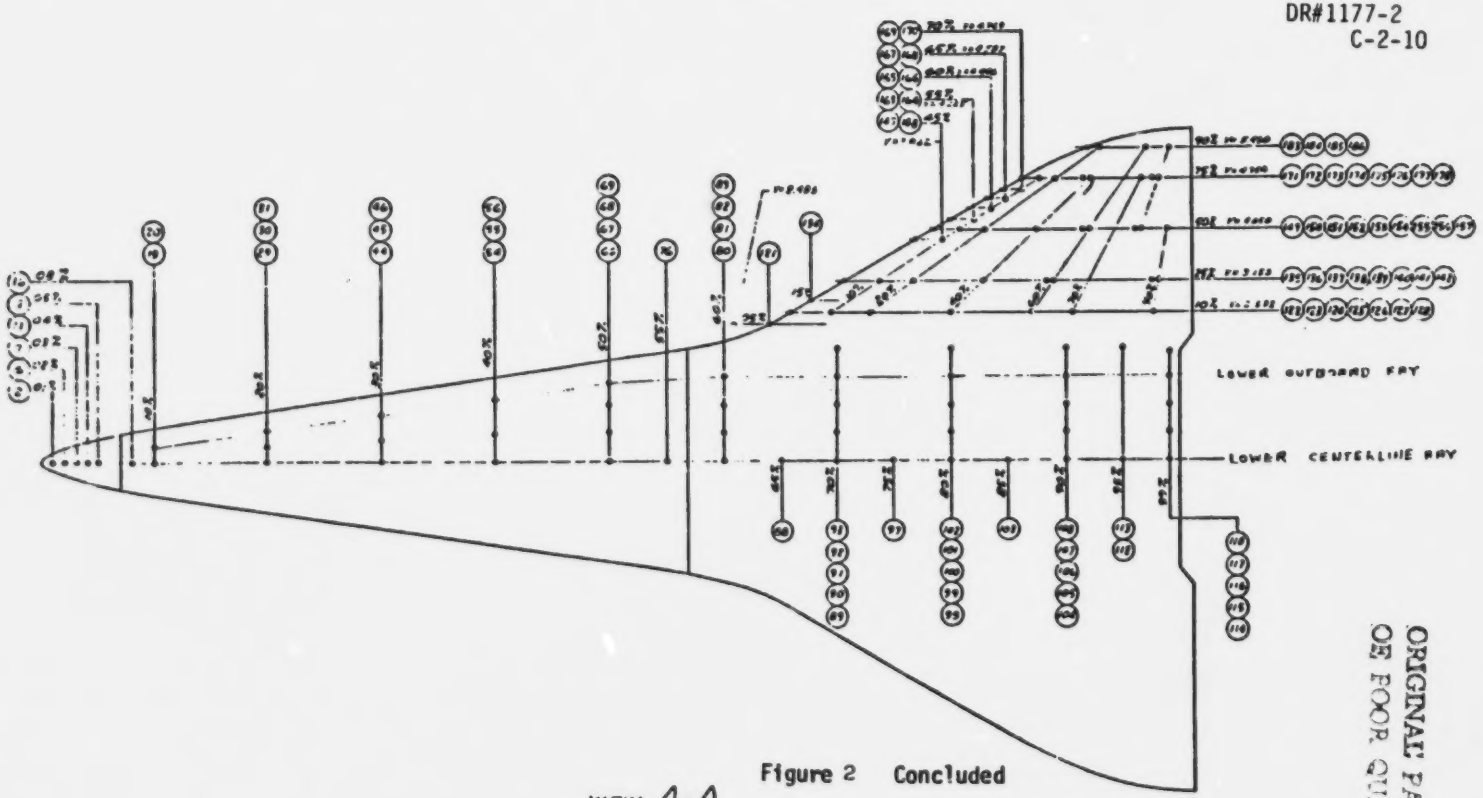

VIEW A-A

Figure 2 Concluded

ORIGINAL PAGE IS
OF POOR QUALITY

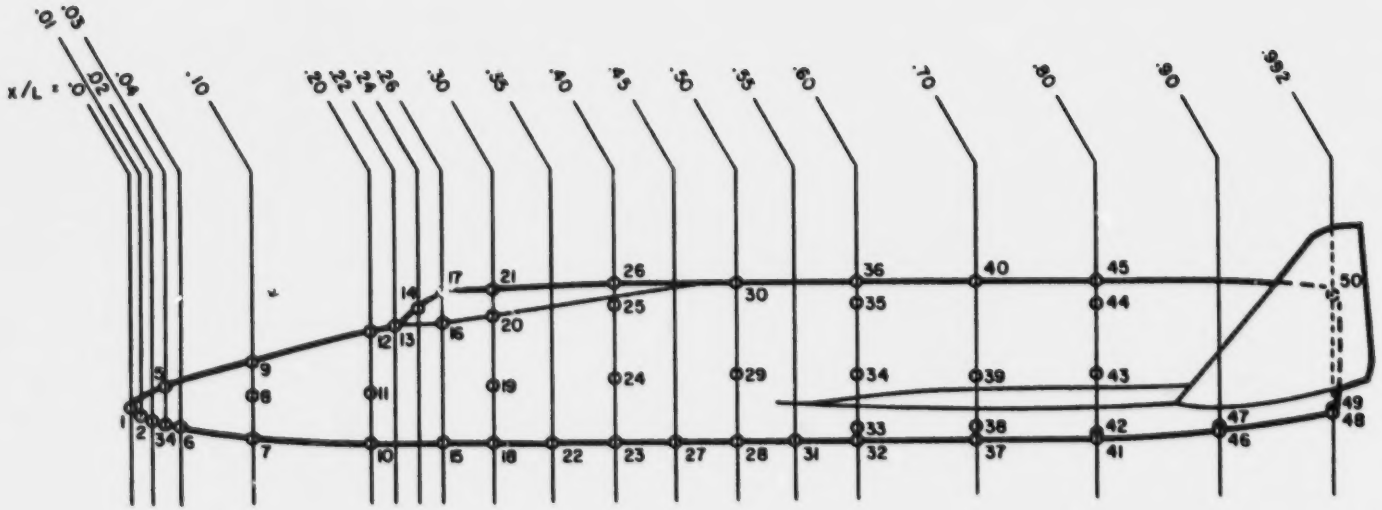

(a) Body.

Figure .. - Thermocouple locations for delta-wing orbiter model.

DELTA WING ORBITER
NR
DR#1180-1
C-2-11

DELTA WING ORBITER
NR
DR#1180-2
C-2-12

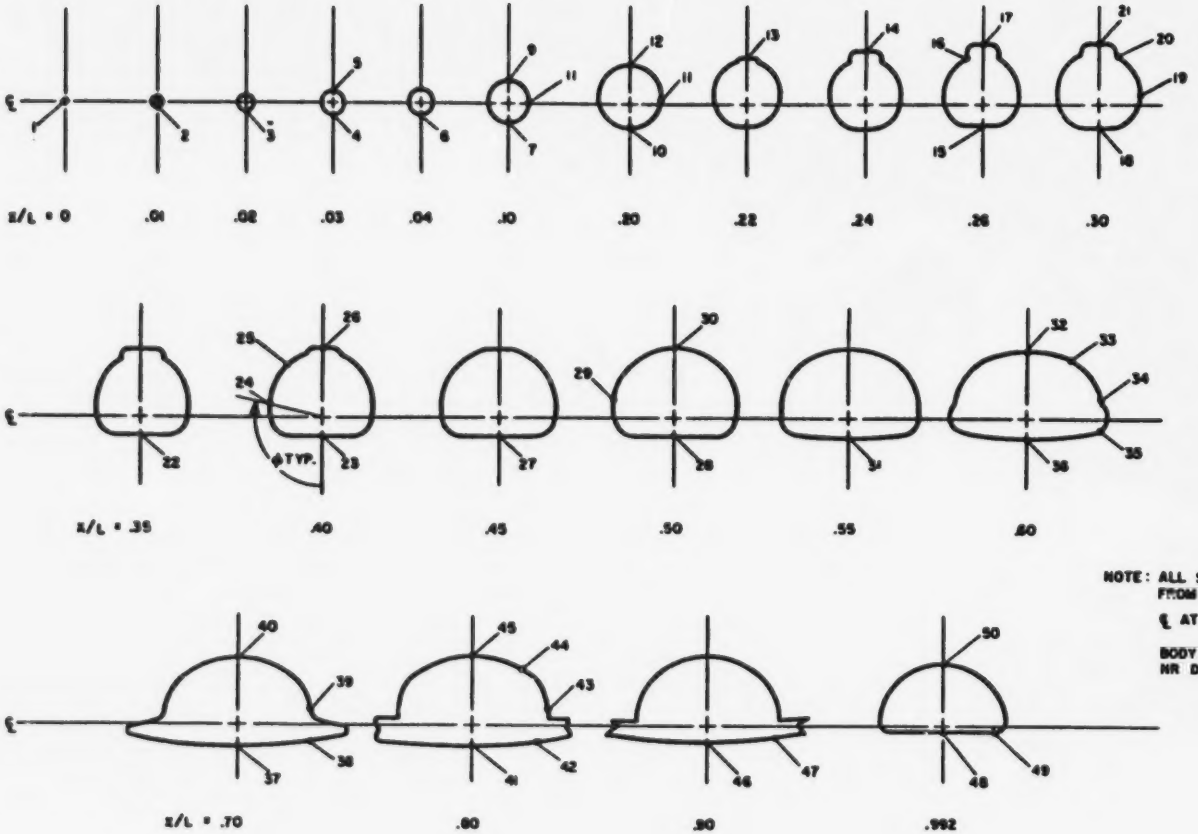

NOTE: ALL SECTIONS AS VIEWED FROM REAR OF MODEL
℄ AT W.L. + .998 cm (+ .393 in.)
BODY SECTIONS AS PER NR DRAWING S-930

(b) Body cross sections.

Figure 3. - Continued.

ORIGINAL PAGE IS
OF POOR QUALITY

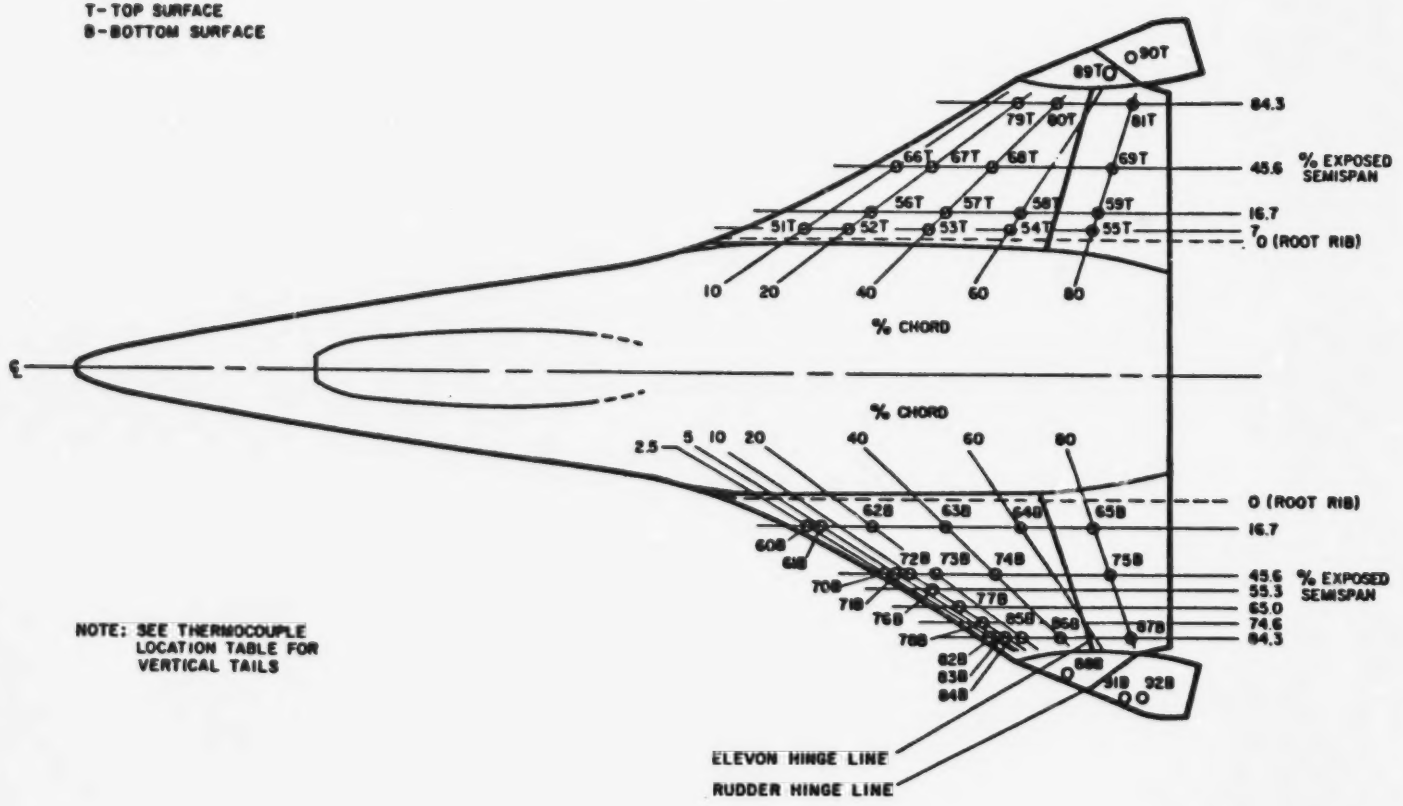

(c) Wing and twin vertical tails.

Figure 3. - Concluded.

DELTA WING ORBITER
NR
DR#1180-3
C-2-13

ORIGINAL PAGE IS
OF POOR QUALITY

DELTA WING ORBITER
NR
DR#1252-1
C-2-14

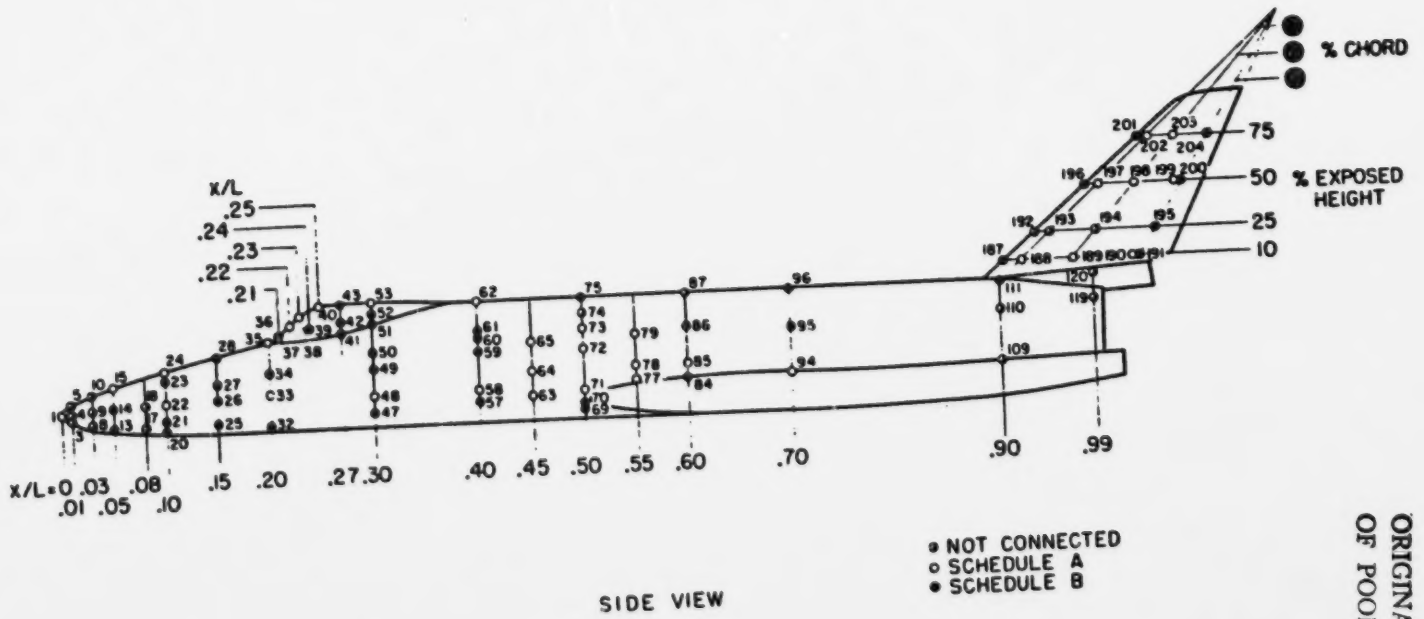

SIDE VIEW

(a) Side view.

Figure 3.- Thermocouple locations for delta-wing orbiter model.

ORIGINAL PAGE IS
OF POOR QUALITY

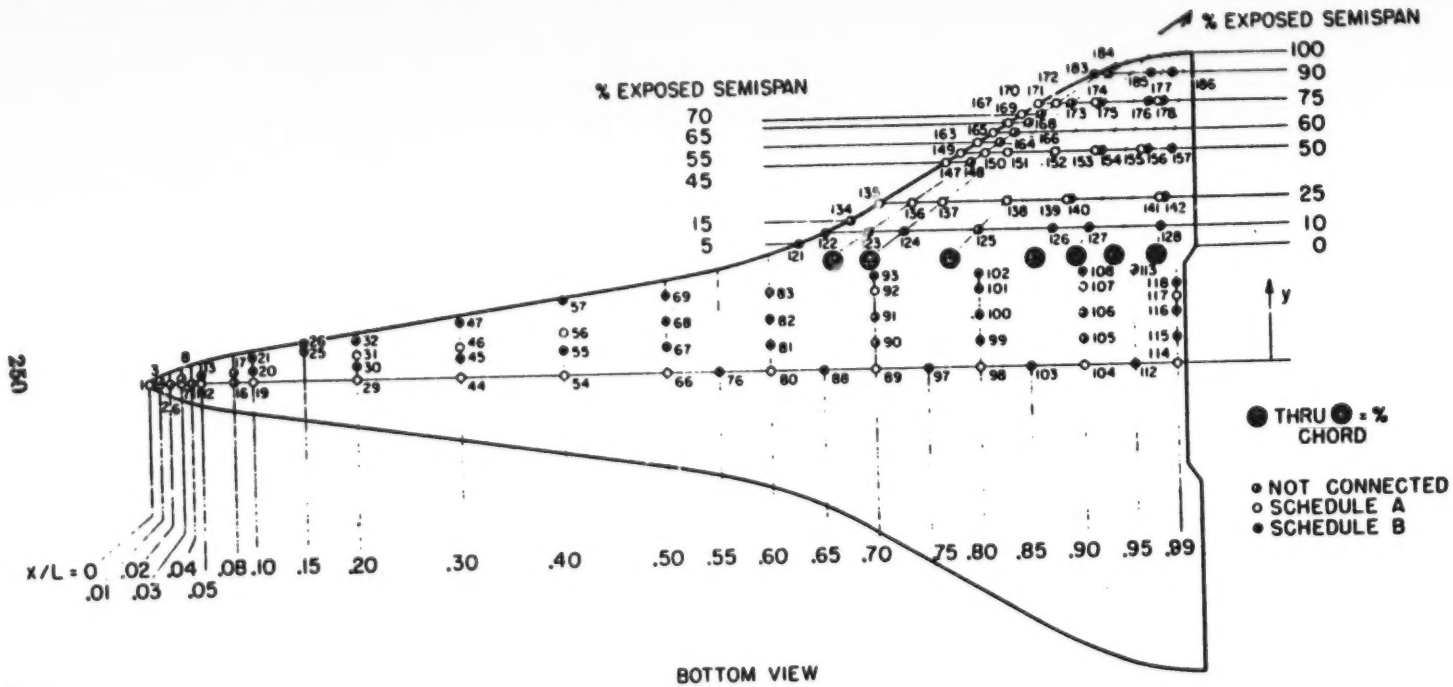

(b) Bottom view.

Figure 3.- Continued.

DELTA WING ORBITER
NR
DR#1252-2
C-2-15

ORIGINAL PAGE IS
OF POOR QUALITY

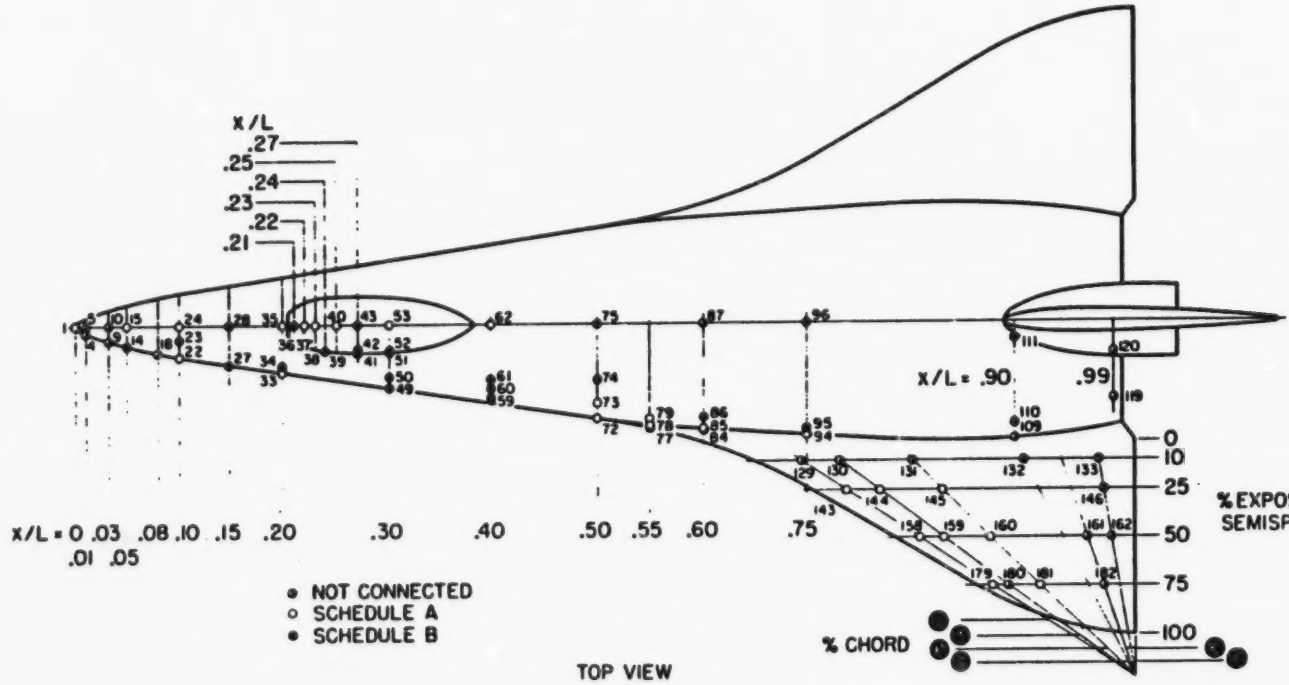

(c) Top view.

Figure 3.- Continued.

ORIGINAL PAGE IS
OF POOR QUALITY

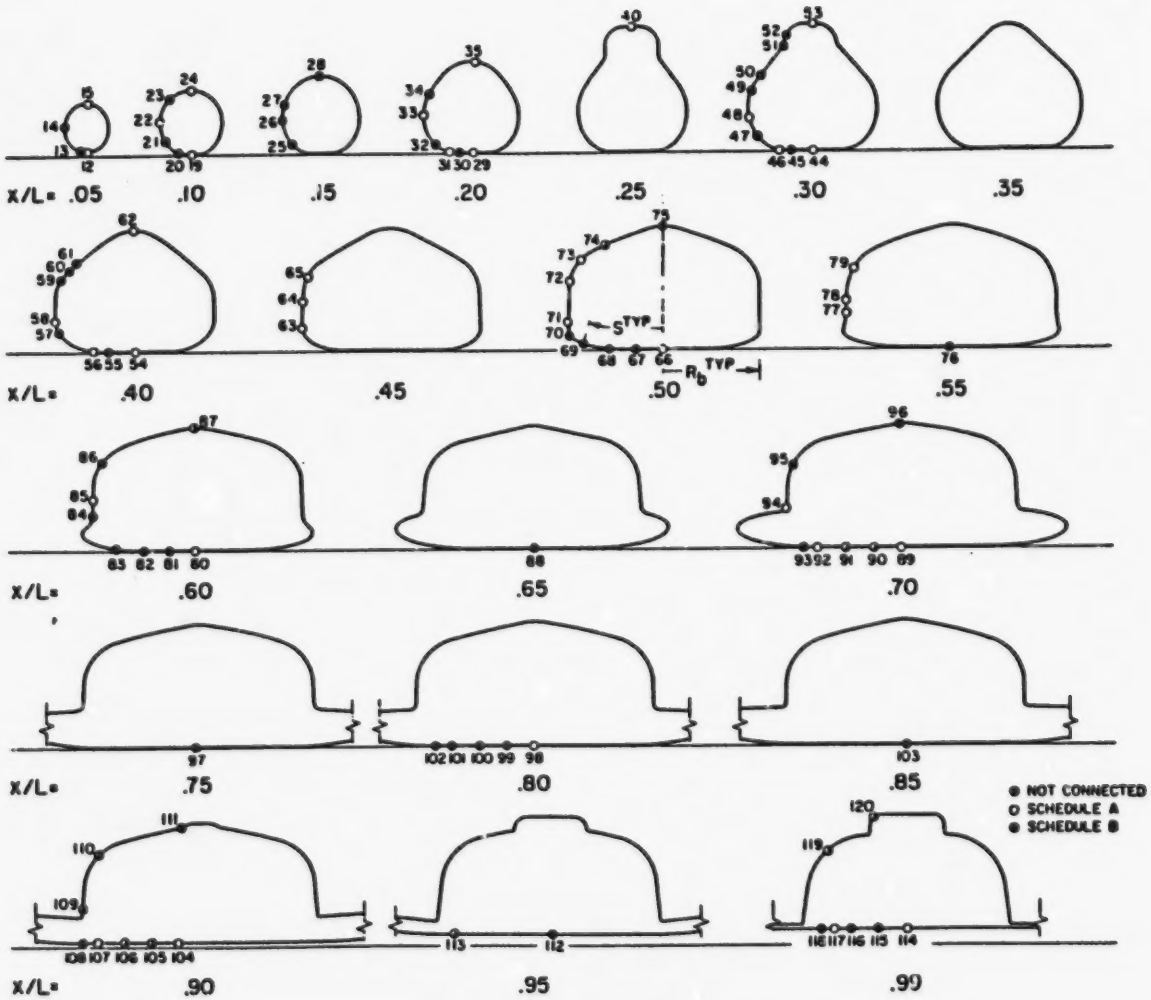

(d) Body cross sections.

Figure 3.- Concluded.

DELTA WING ORBITER
NR
DR#1252-4
C-2-17

ORIGINAL PAGE IS
OF POOR QUALITY

STRAIGHT WING ORBITER
NR
DR#1098 C-2-18

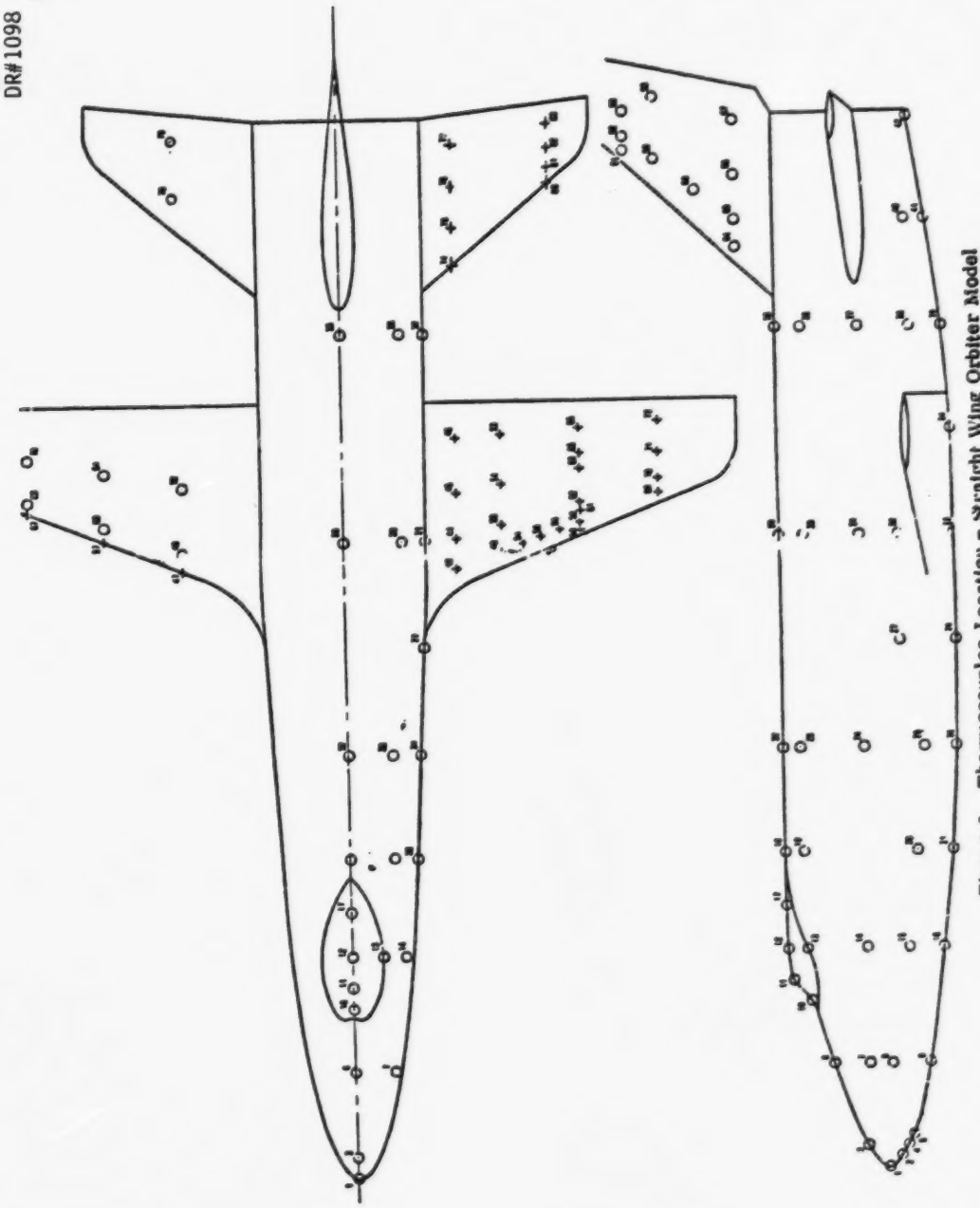

Figure 6. Thermocouples Location - Straight Wing Orbiter Model

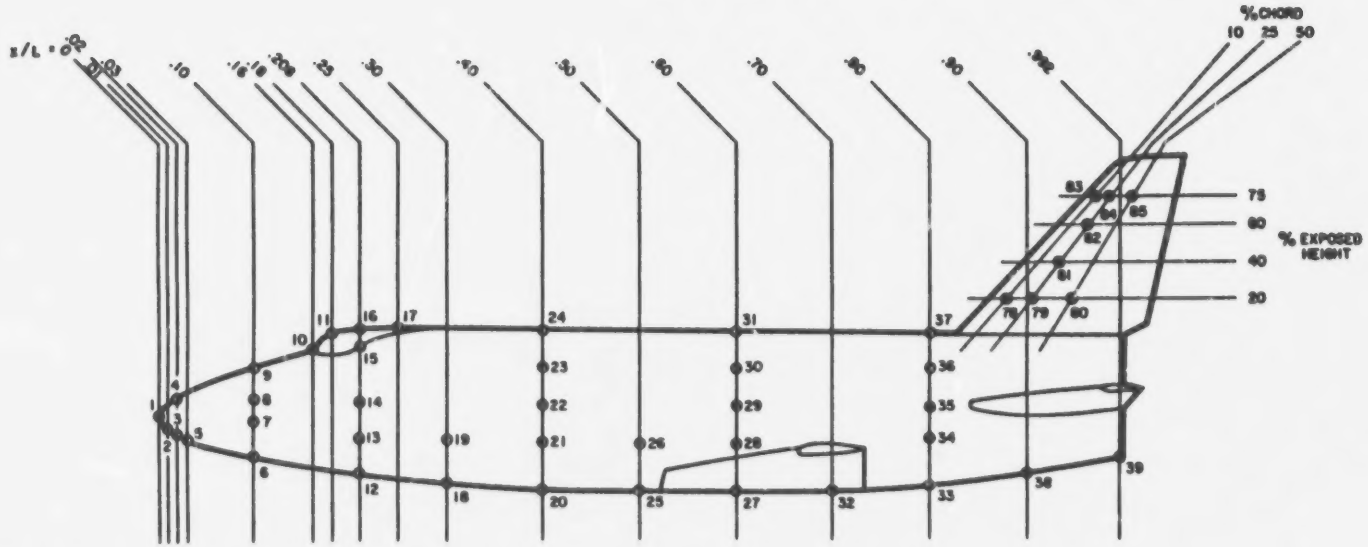

(a) Body and vertical tail.

Figure III.- Thermocouple locations for straight-wing orbiter model.

STRAIGHT WING ORBITER
NR
DR#1131-1
C-2-19

ORIGINAL PAGE IS
OF POOR QUALITY

NR
DRM1131-2
C-2-20

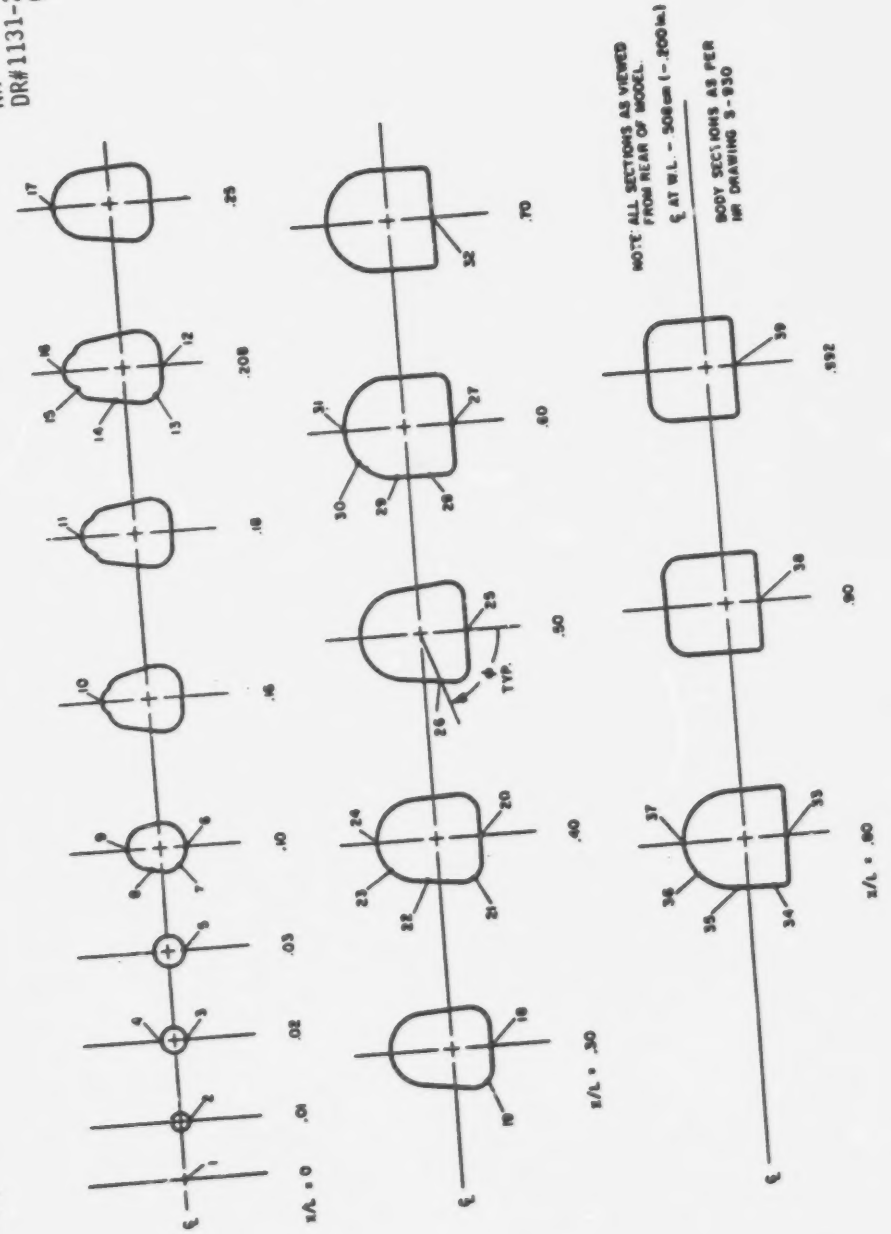

(b) Body cross sections.

Figure III.- Continued.

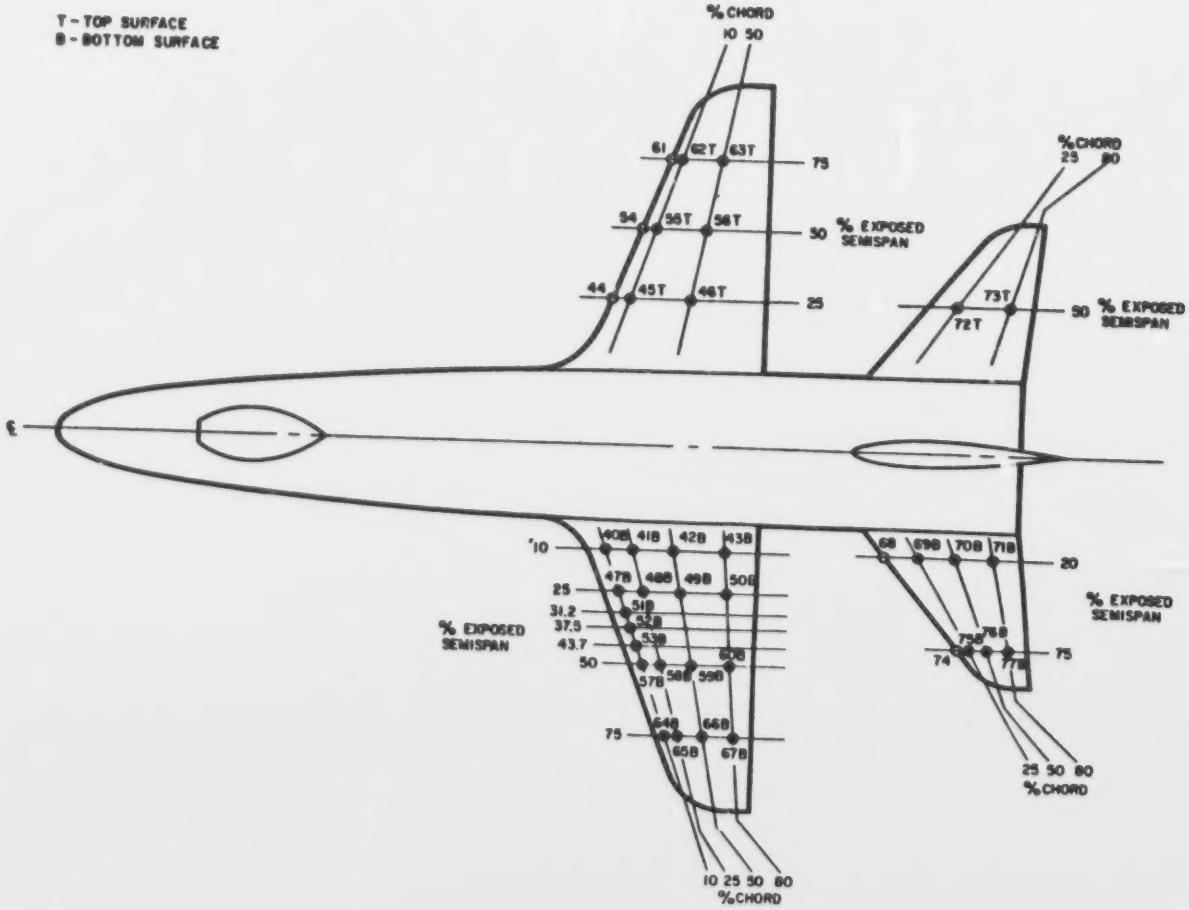

(c) Wing and horizontal tail.

Figure III.- Concluded.

STRAIGHT WING ORBITER
NR
DR#1131-3
C-2-21

FIGURE 1.

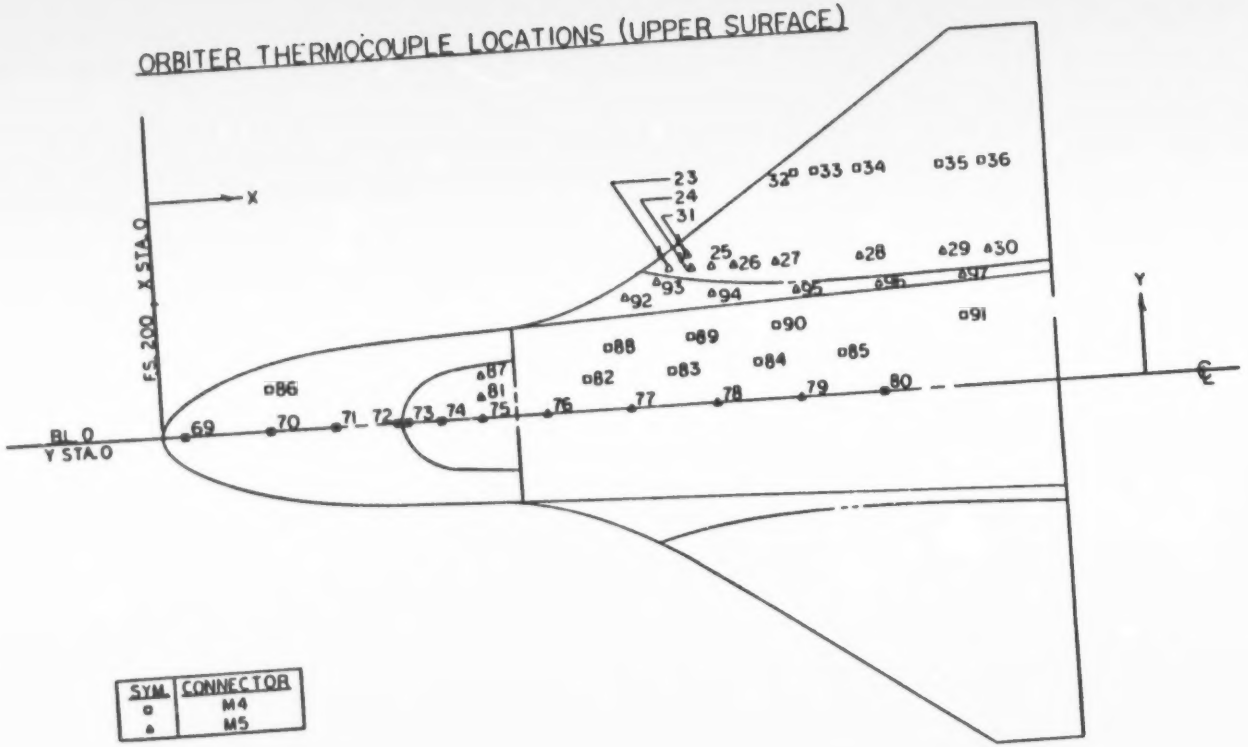

ORIGINAL PAGE IS
OF POOR QUALITY

FIGURE 2.

ORBITER THERMOCOUPLE LOCATIONS (LOWER SURFACE)

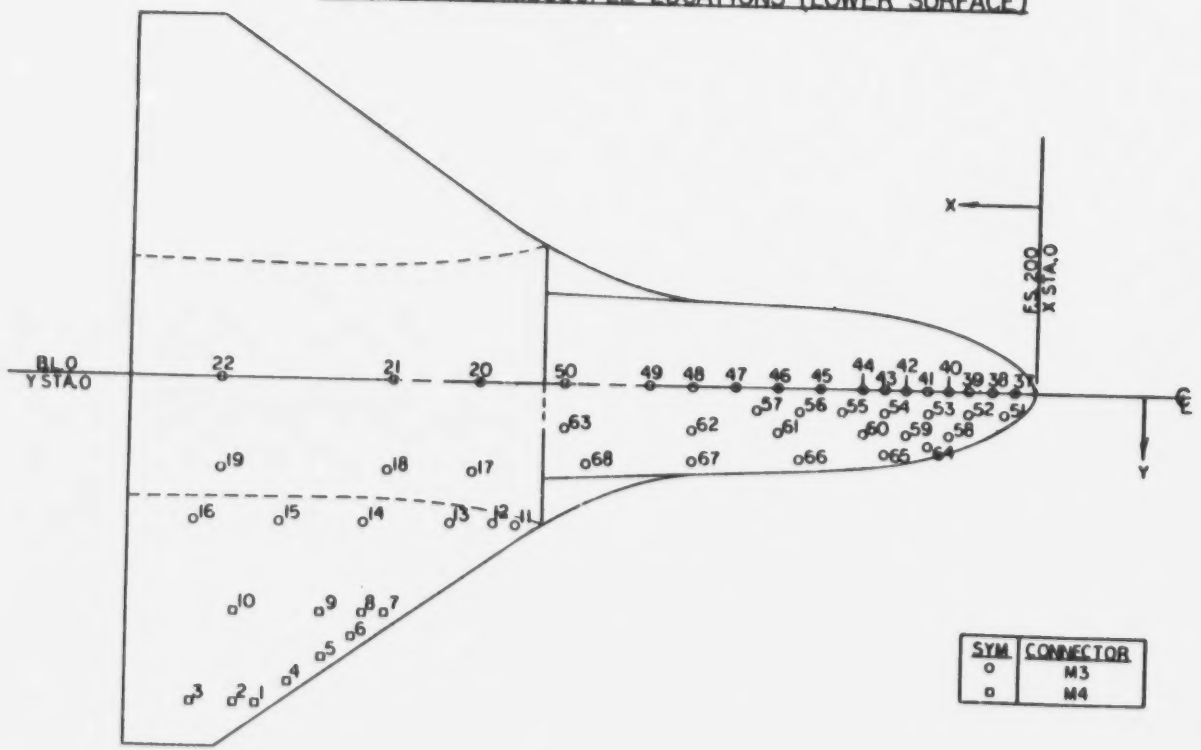

UNIQUE CONFIG. ORBITER
GAC
DR#1178-2
C-2-23

ORIGINAL PAGE IS
OF POOR QUALITY

FIGURE 3.

ORBITER THERMOCOUPLE LOCATIONS (PROFILE)

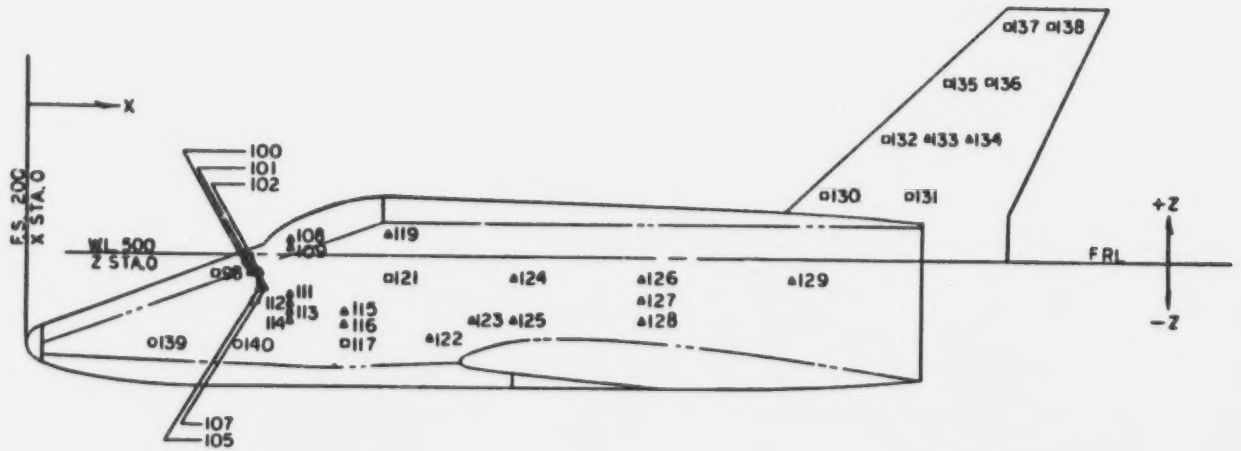

SYM.	CONNECTOR
○	M3
○	M4
△	M5

ORIGINAL PAGE IS
OF POOR QUALITY

FIGURE 4.

TANK THERMOCOUPLE LOCATIONS

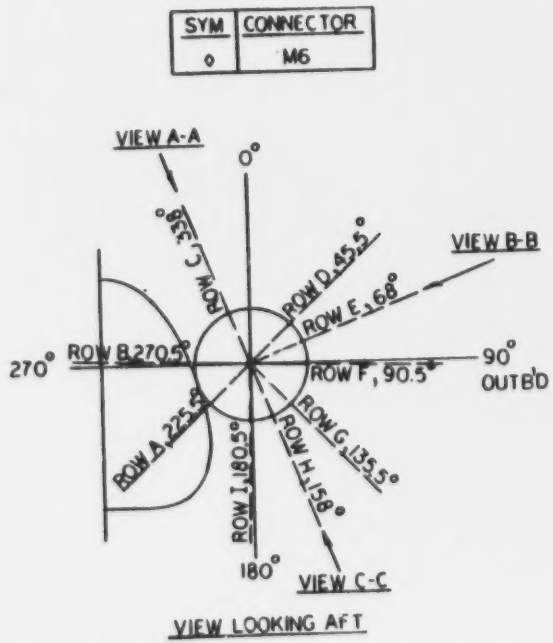

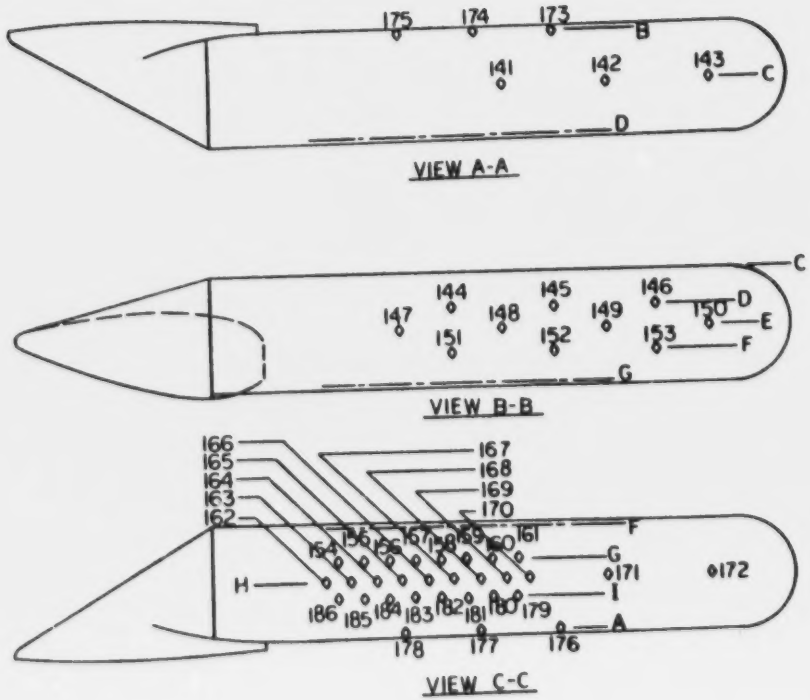

UNIQUE CONFIG. ORBITER
GAC
DR#1178-4
C-2-25

ORIGINAL PAGE IS
OF POOR QUALITY

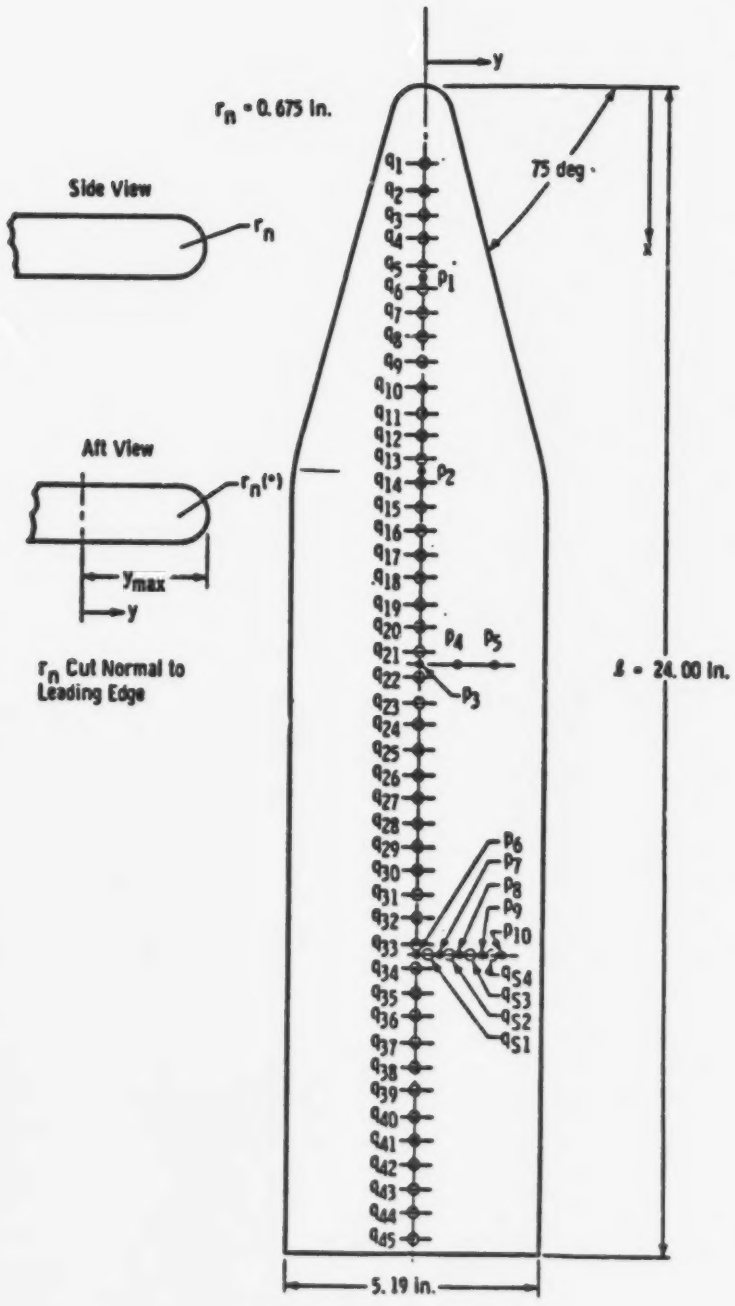

b. LRC-SB Model, Configuration 10
Fig. 3 Concluded

ORIGINAL PAGE IS
OF POOR QUALITY

APPENDIX C-3

MODEL FIGURES

LAUNCH HEAT TRANSFER

FIGURE 8 BOOSTER INSTRUMENTATION LOCATIONS

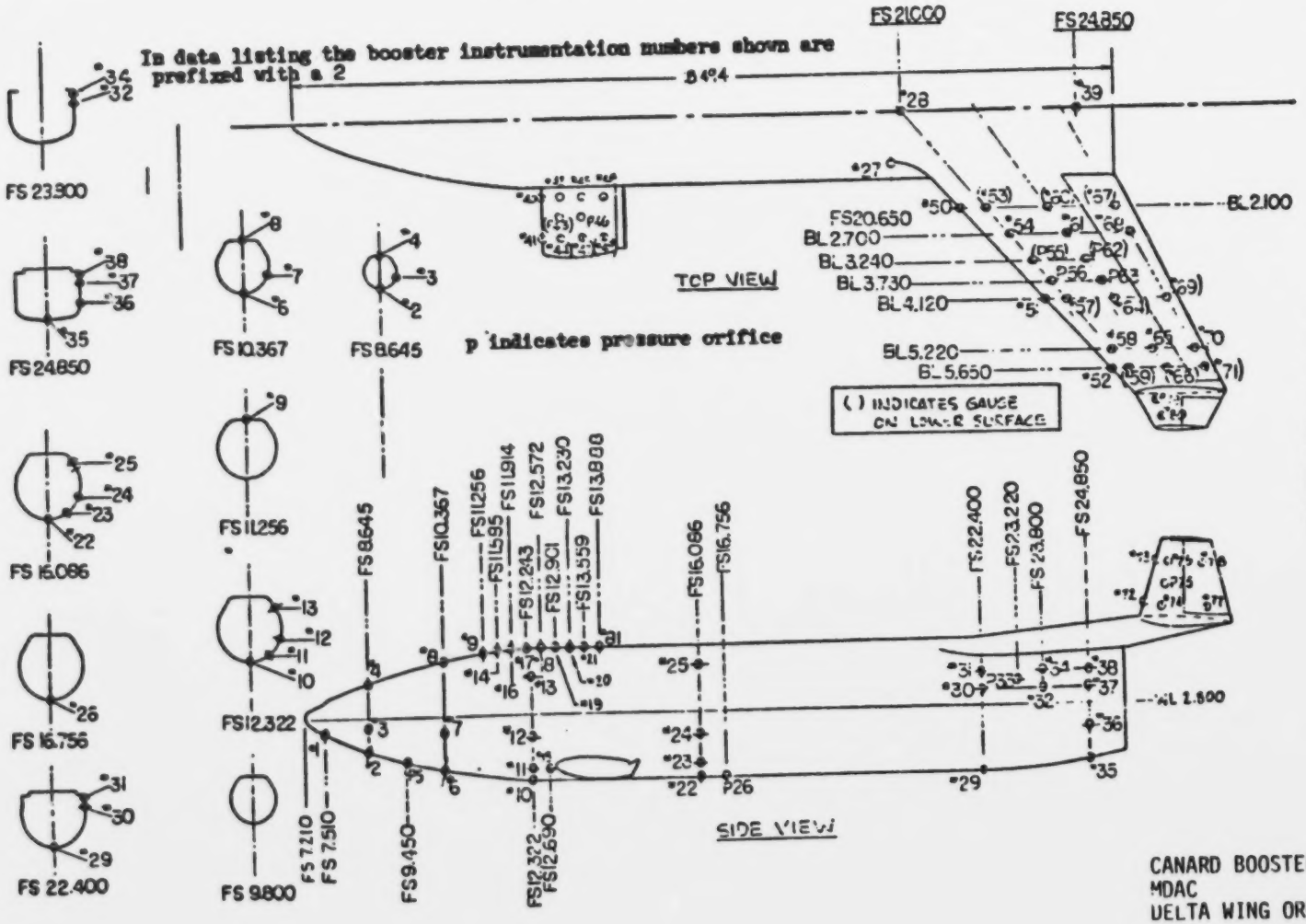

CANARD BOOSTER
MDAC
DELTA WING ORBITER
MDAC
DR#1170-1 C-3-1

ORIGINAL PAGE IS
OF POOR QUALITY

PRECEDING PAGE BLANK NOT FILMED

CANARD BOOSTER
MDAC
DELTA WING ORBITER
MDAC
DR#1170-2 C-3-2

FIGURE 7 ORBITER INSTRUMENTATION LOCATIONS

p indicates pressure orifice
In data listing the orbiter instrumentation numbers shown are prefixed with a 1

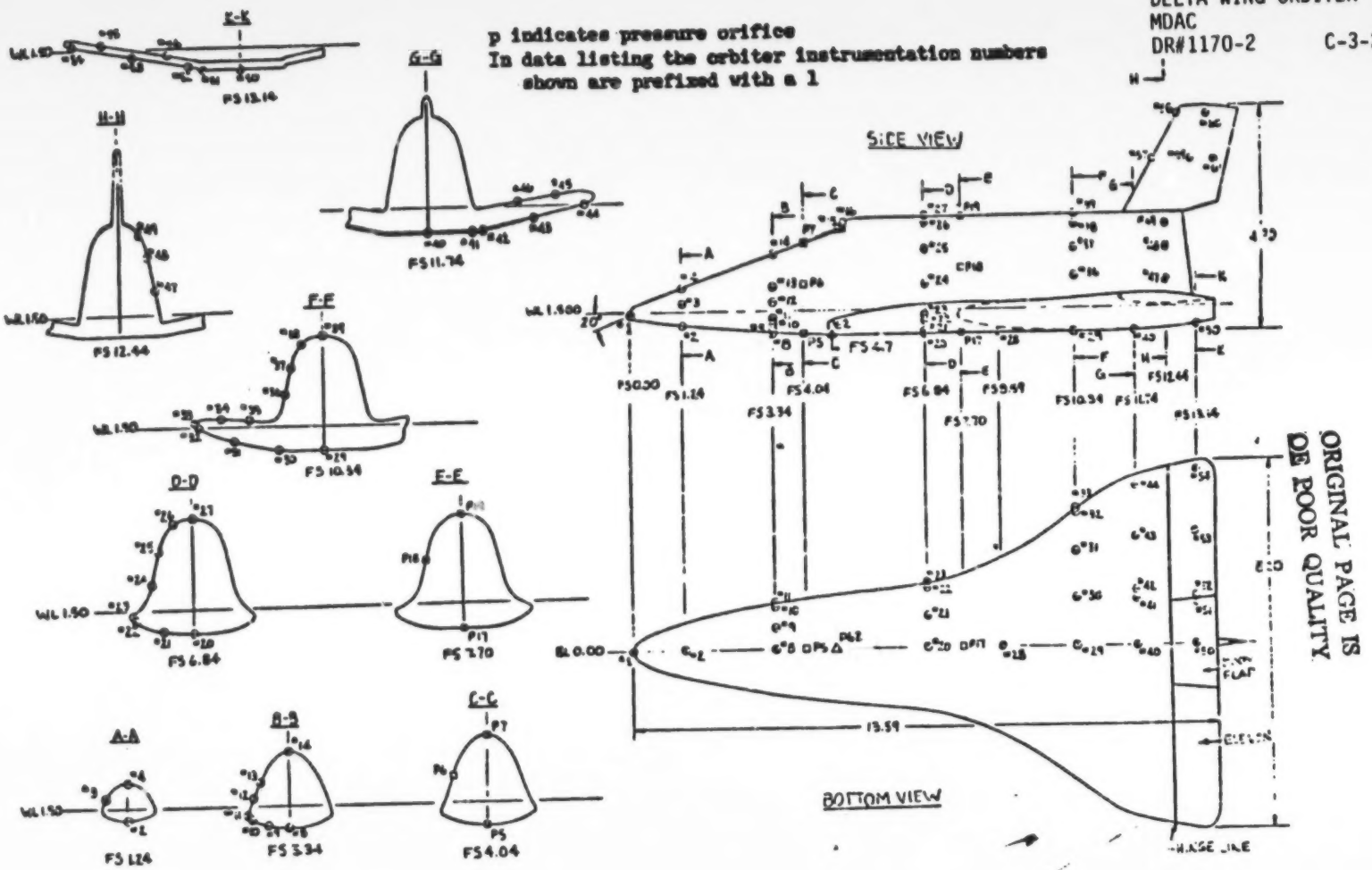

ORIGINAL PAGE IS
OF POOR QUALITY

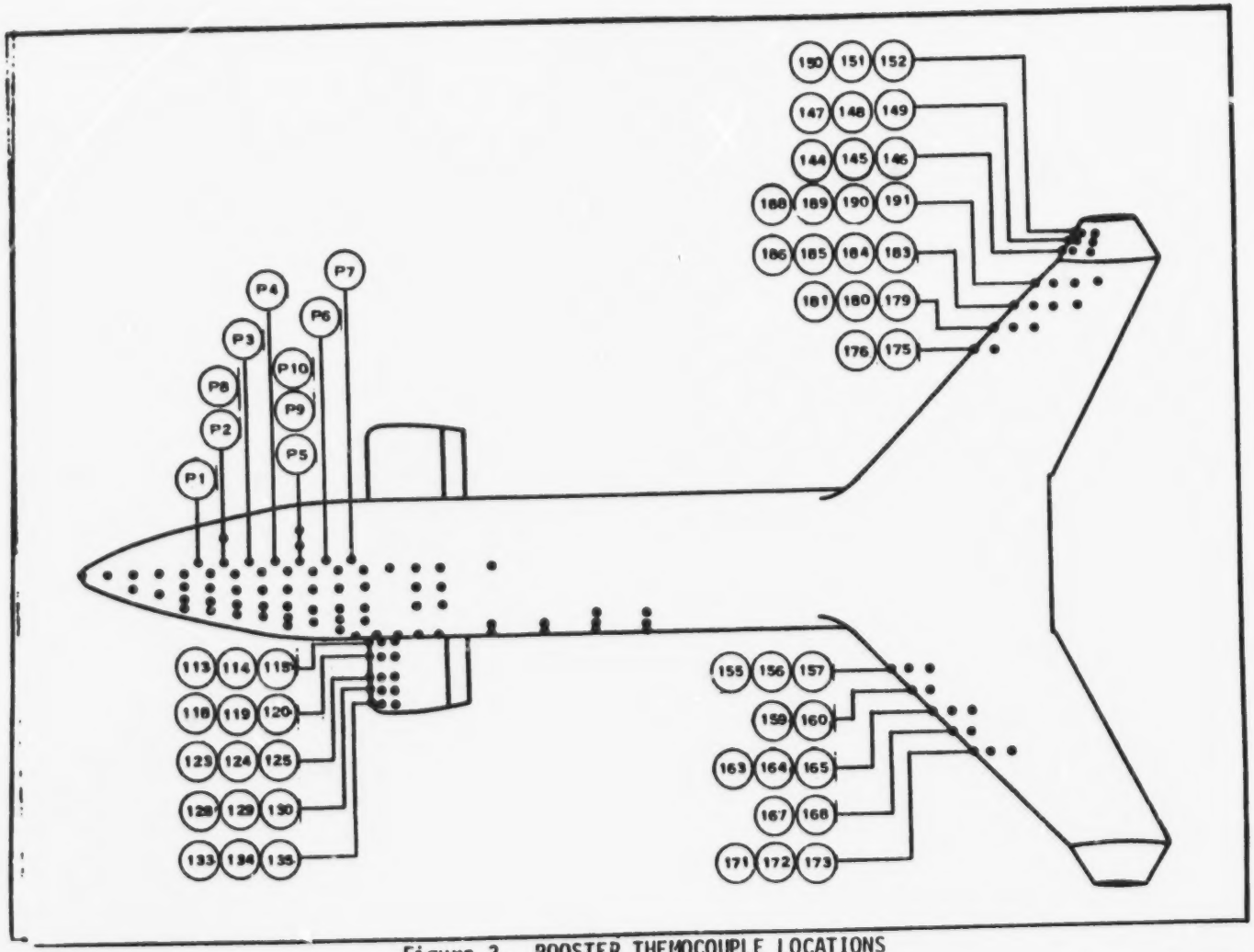

Figure 3. BOOSTER THEMOCOUPLE LOCATIONS

CANARD BOOSTER
MDAC
DELTA WING ORBITER
MDAC
DR#1238-1

CANARD BOOSTER
MDAC
DELTA WING ORBITER
MDAC
DR#1238-2 C-3-4

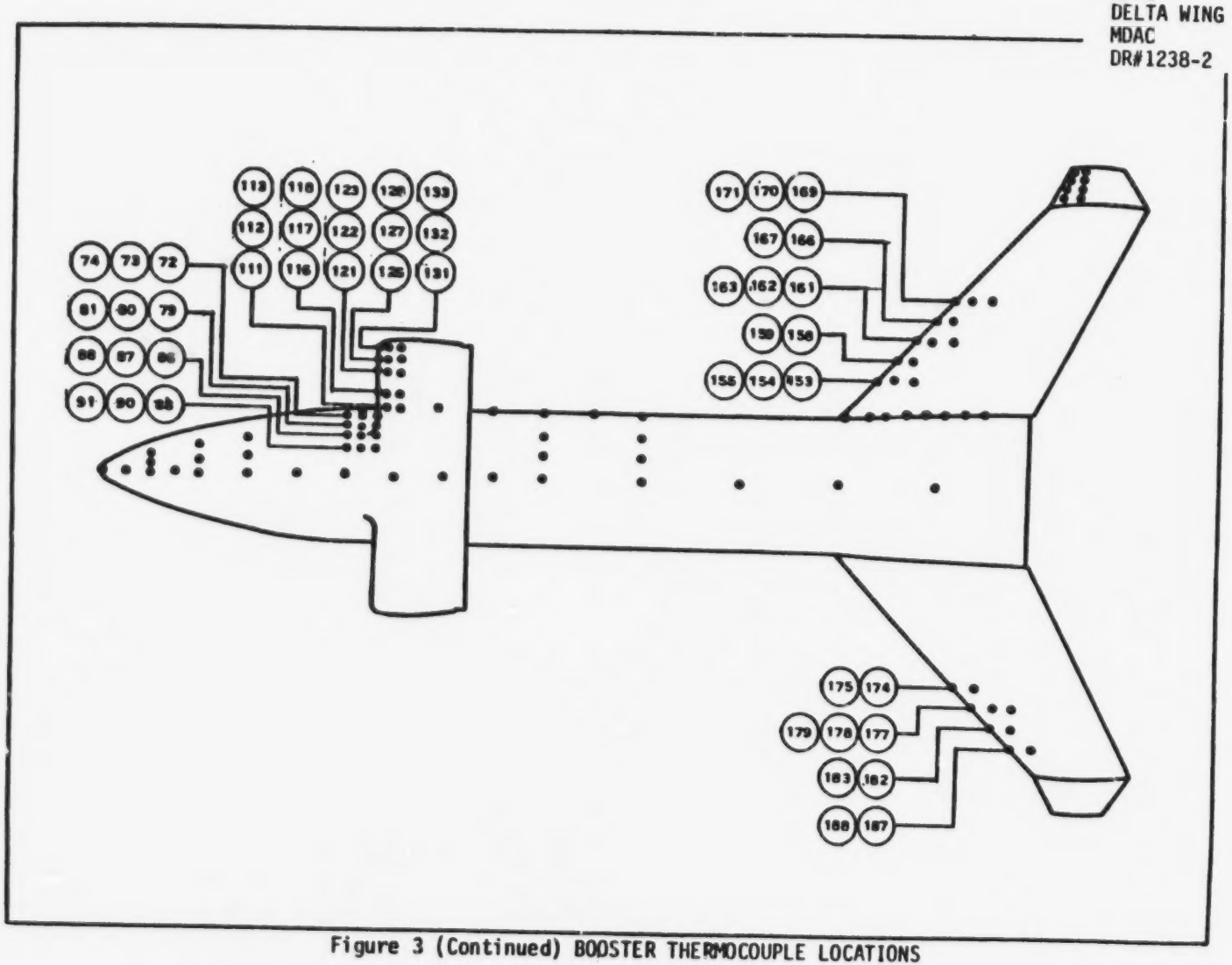

Figure 3 (Continued) BOOSTER THERMOCOUPLE LOCATIONS

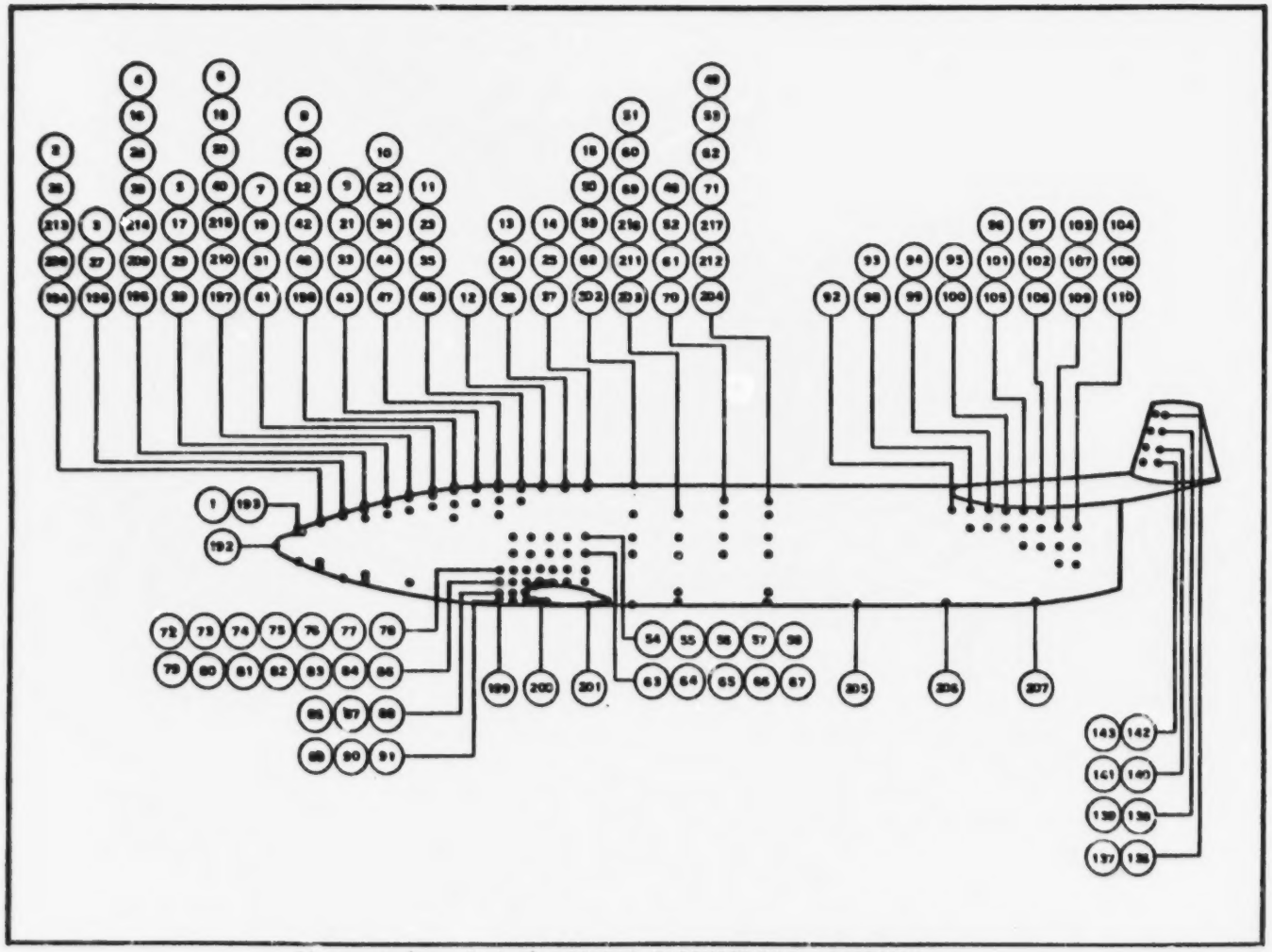

Figure 3 (Concluded) BOOSTER THERMOCOUPLE LOCATIONS

CANARD BOOSTER
MDAC
DELTA WING ORBITER
MDAC
DR#1238-3 C-3-5

CYLINDRICAL BOOSTER
GAC
DELTA WING ORBITER
GAC
DR#1234-1 C-3-6

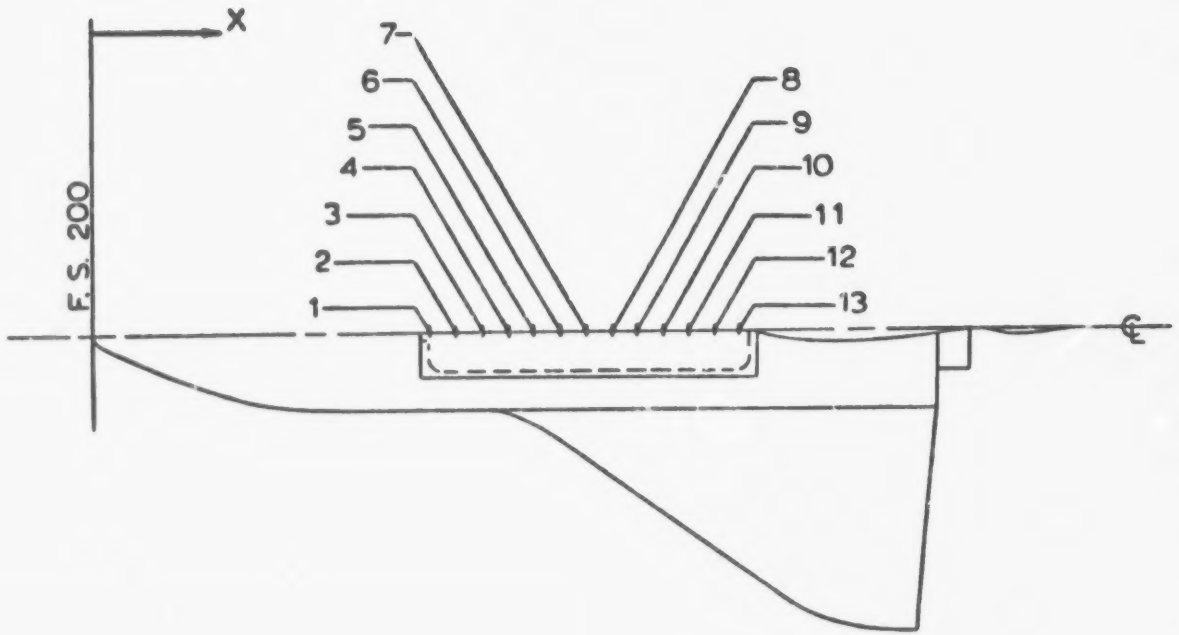

ORIGINAL PAGE IS
OF POOR QUALITY

FIGURE 1. ORBITER THERMOCOUPLE LOCATIONS (UPPER SURFACE)

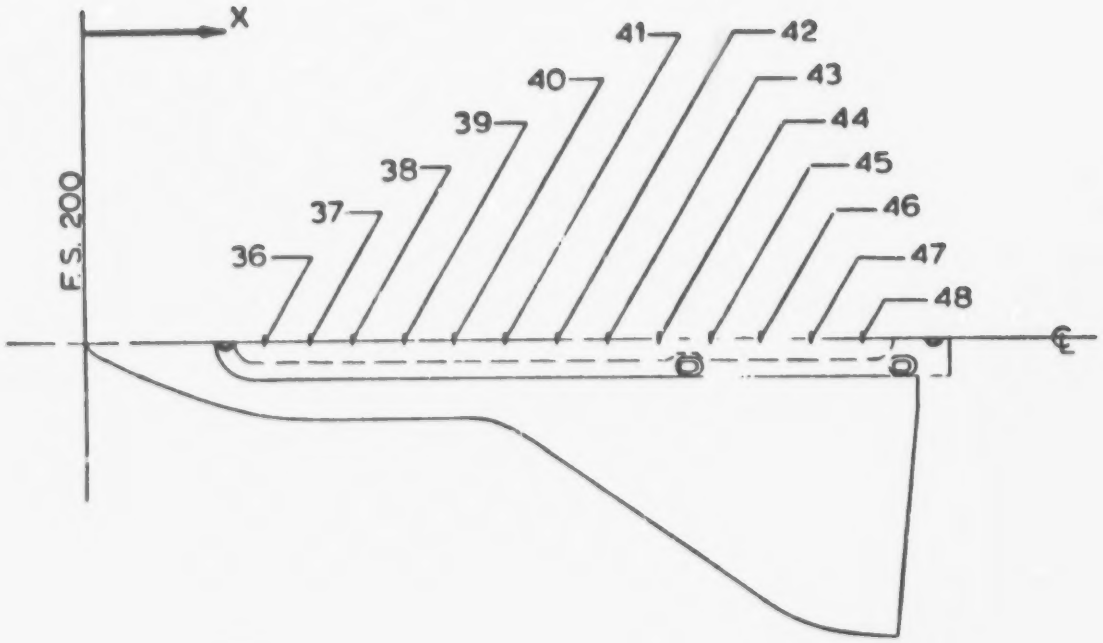

FIGURE 2. ORBITER THERMOCOUPLE LOCATIONS (LOWER SURFACE)

CYLINDRICAL BOOSTER
GAC
DELTA WING ORBITER
GAC
DR#1234-2 C-3-7

FIGURE 3. HO TANK THERMOCOUPLE LOCATIONS

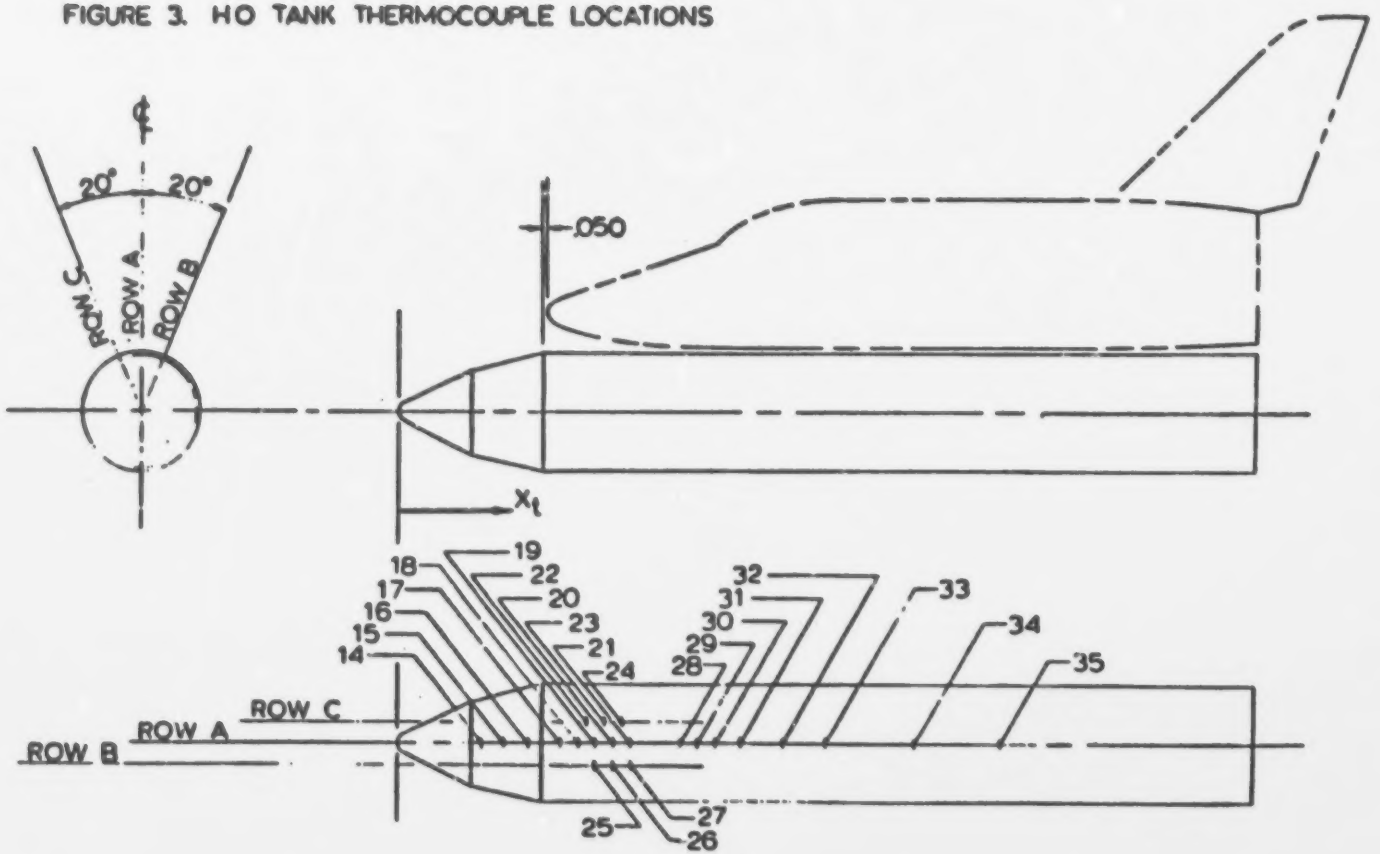

FIGURE 1.

ORBITER THERMOCOUPLE LOCATIONS (UPPER SURFACE)

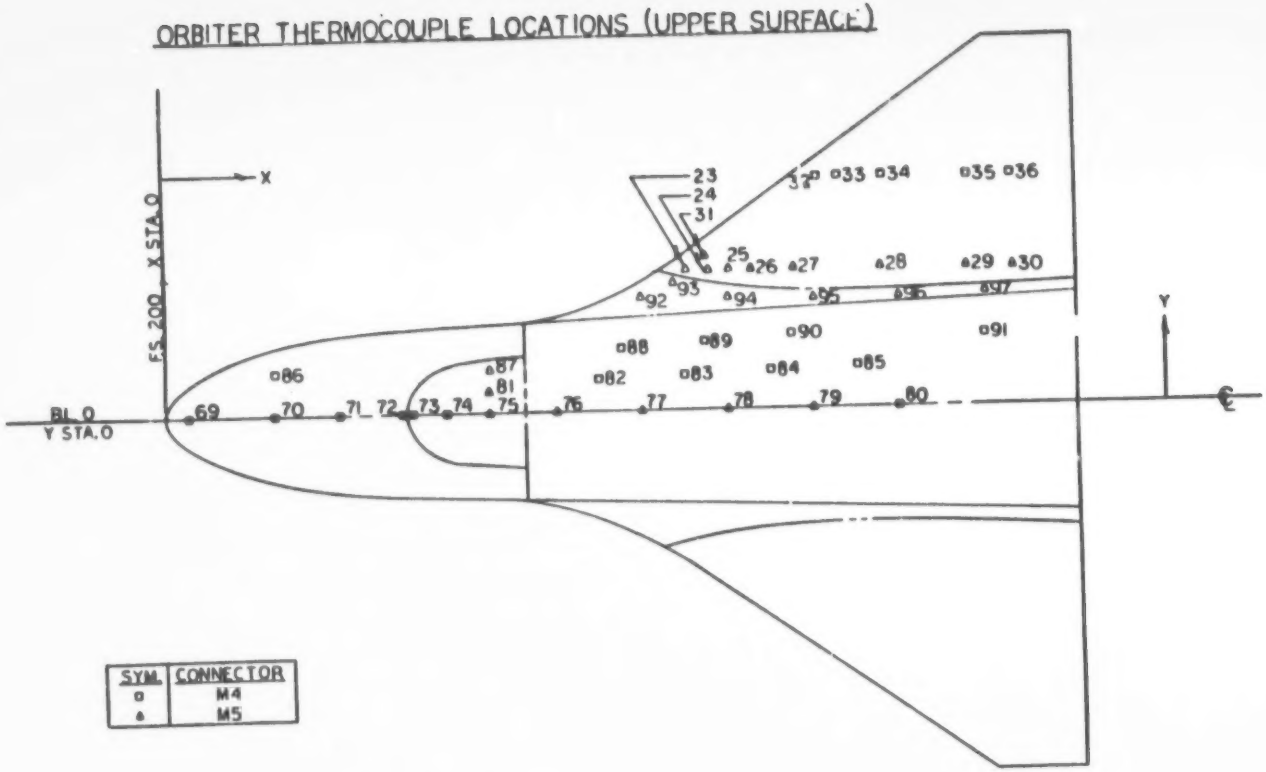

CYLINDRICAL BOOSTER
TBC
UNIQUE CONFIG. ORBITER
GAC
DR#1178-1 C-3-9

CYLINDRICAL BOOSTER
TBC
UNIQUE CONFIG. ORBITER
GAC
DR#1178-2 C-3-10

ORBITER THERMOCOUPLE LOCATIONS (LOWER SURFACE)

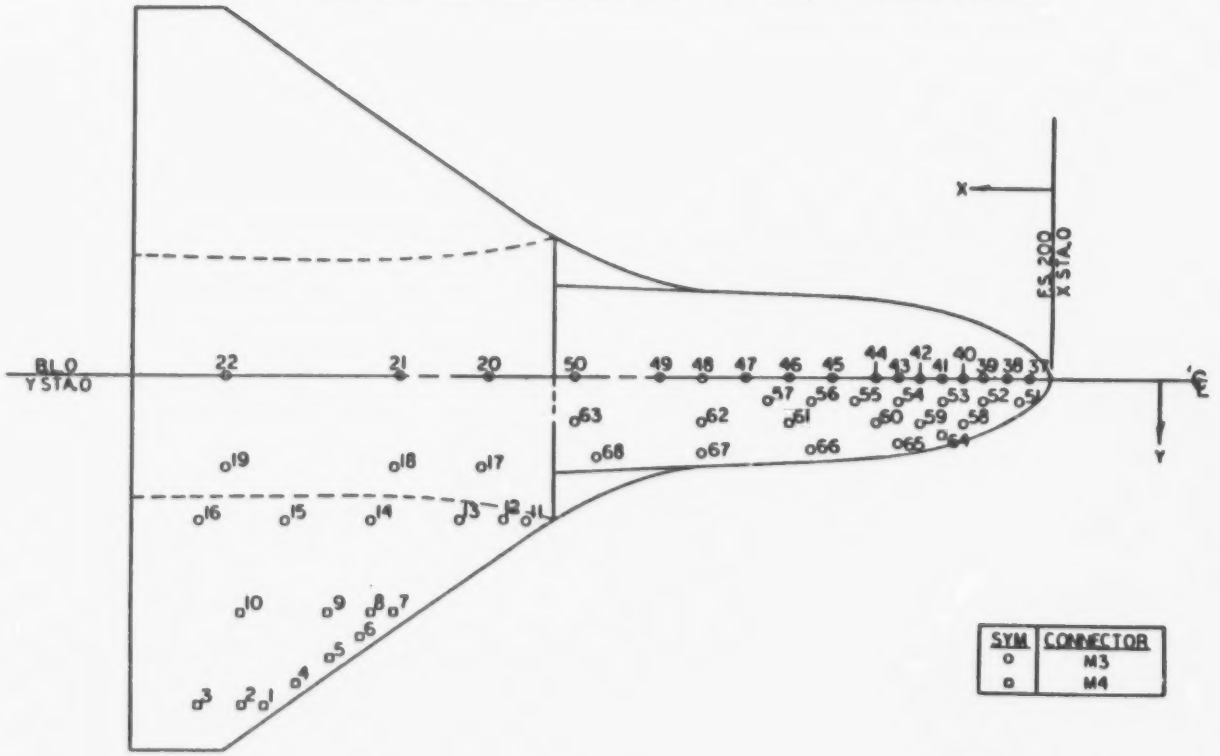

FIGURE 3.

ORBITER THERMOCOUPLE LOCATIONS (PROFILE)

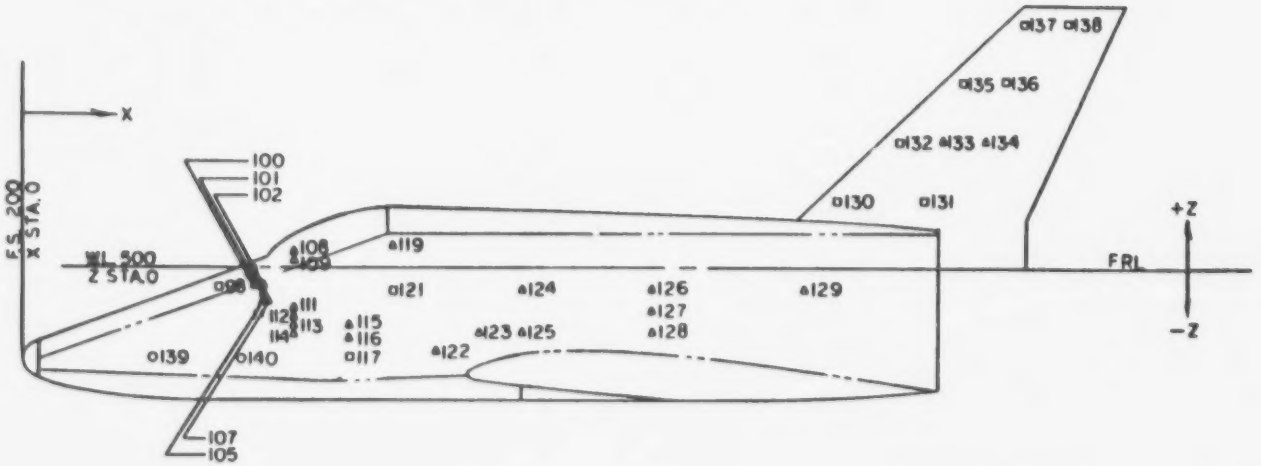

SYM.	CONNECTOR
o	M3
□	M4
Δ	M5

CYLINDRICAL BOOSTER
TBC
UNIQUE CONFIG. ORBITER
GAC
DR#1178-3 C-3-11

CYLINDRICAL BOOSTER
TBC
UNIQUE CONFIG. ORBITER
GAC
FIGURE 4. DR#1178-4 C-3-12

TANK THERMOCOUPLE LOCATIONS

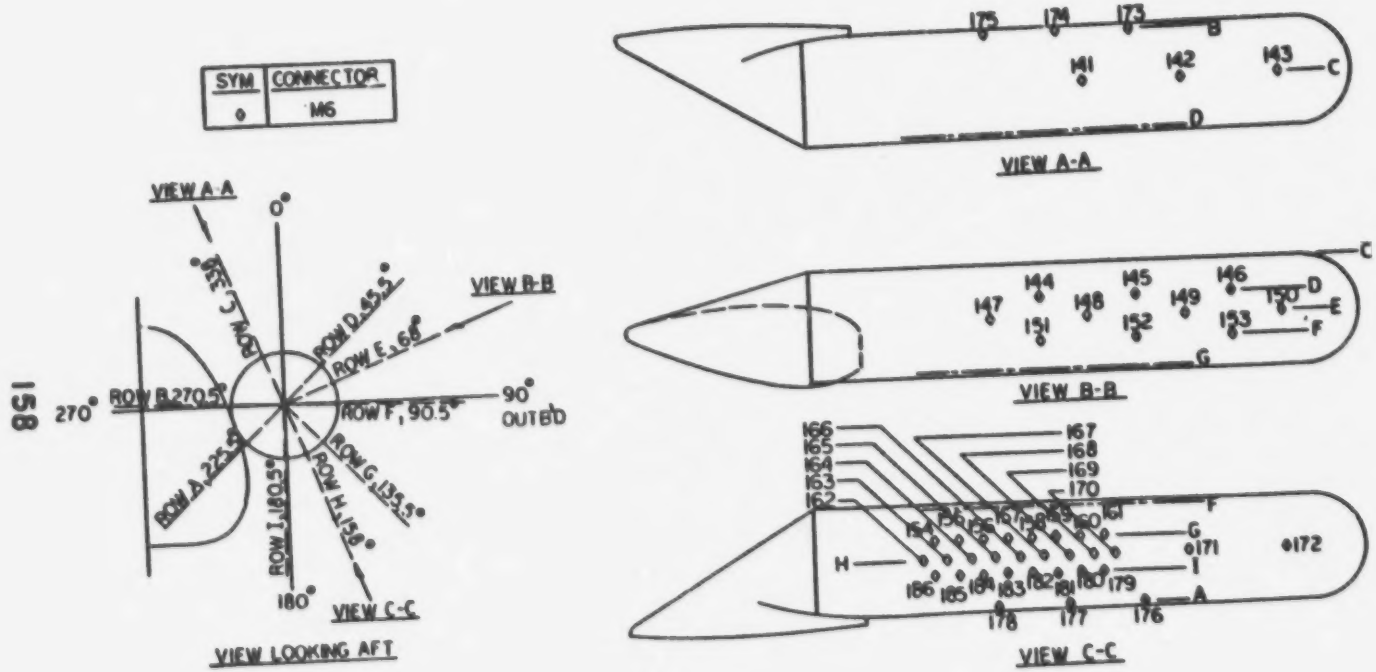

DELTA WING BOOSTER
GD/C
DELTA WING ORBITER
NR
DR#1098-1 C-3-13

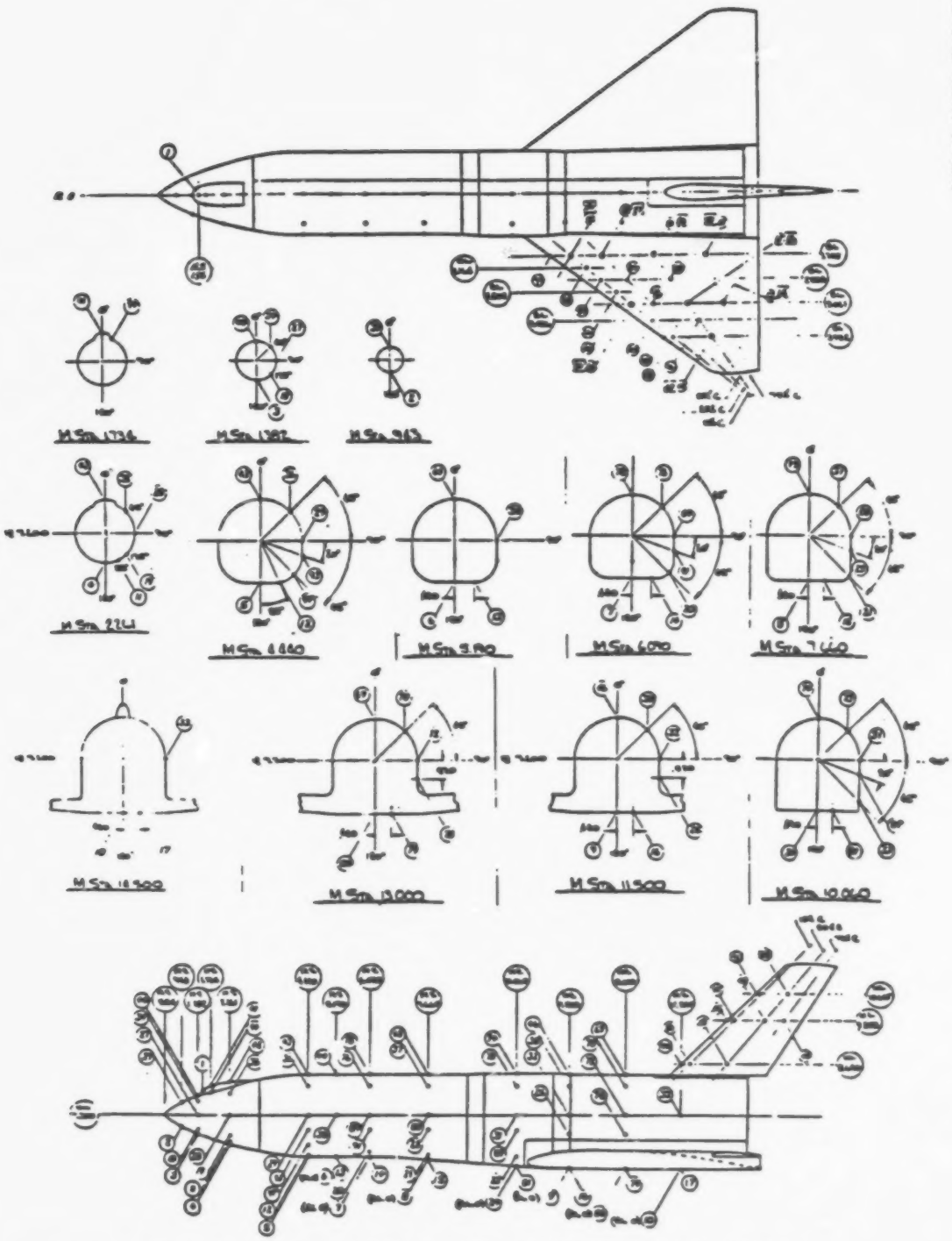

Figure 5. Thermocouples Location - Delta Wing Booster Model

ORIGINAL PAGE IS
OE POOR QUALITY

DELTA WING BOOSTER
GD/C
DELTA WING ORBITER
NR
DR#1098-2 C-3-14

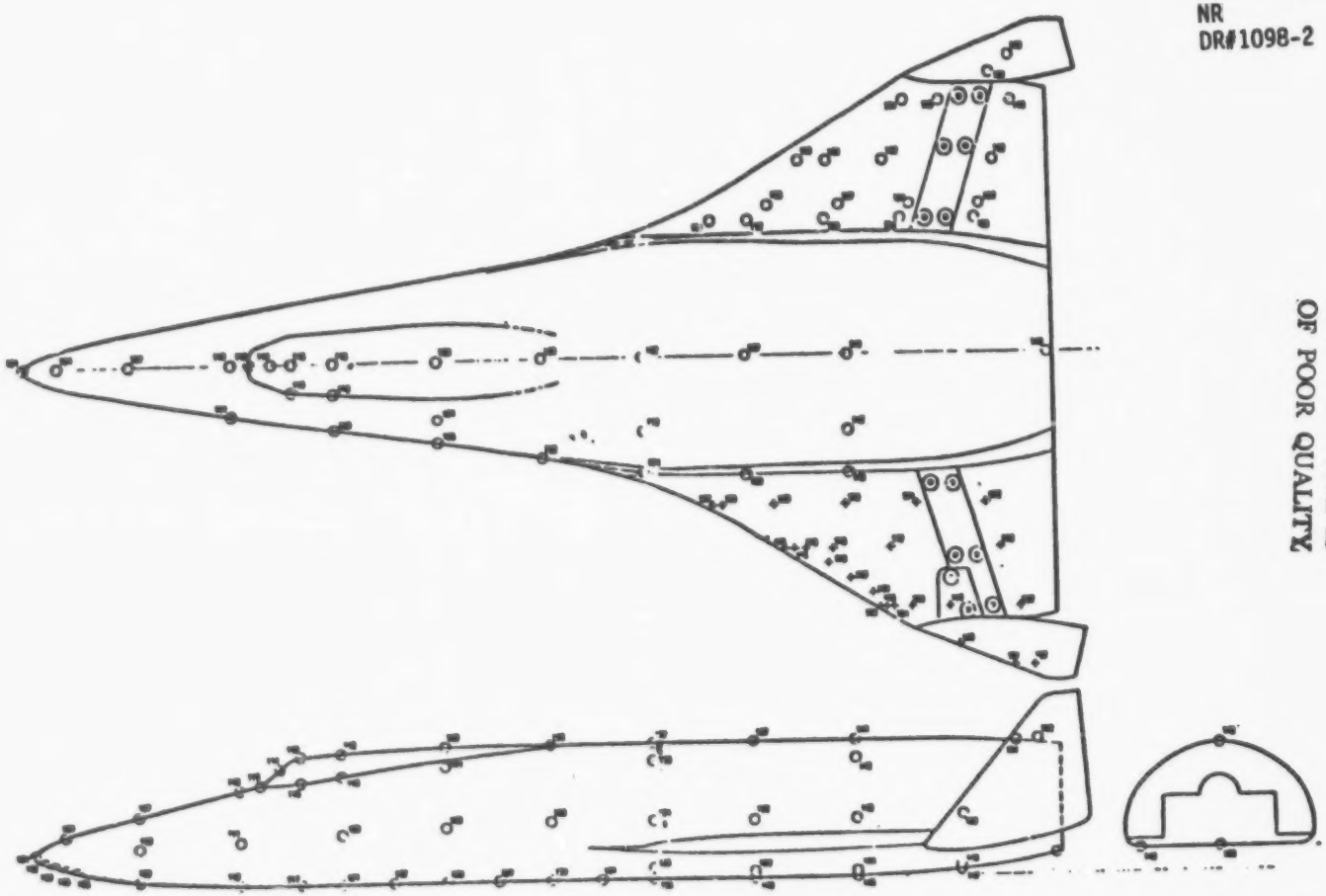

Figure 7. Thermocouples Location - Delta Wing Orbiter Model

ORIGINAL PAGE IS
OF POOR QUALITY

ORIGINAL PAGE IS
OF POOR QUALITY

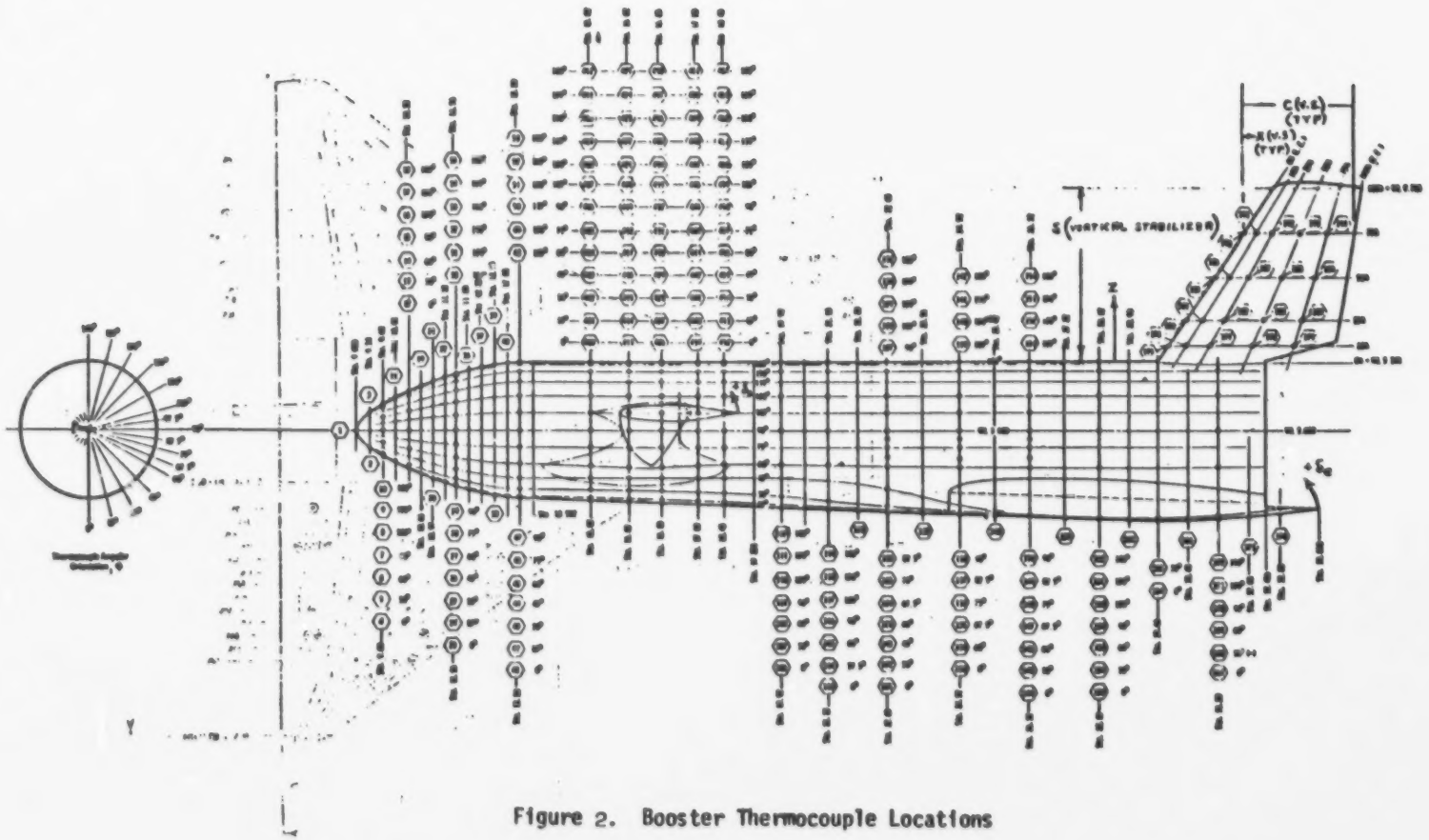

Figure 2. Booster Thermocouple Locations

DELTA WING BOOSTER
GD/C
DELTA WING ORBITER
NR
DR#1177-1 C-3-15

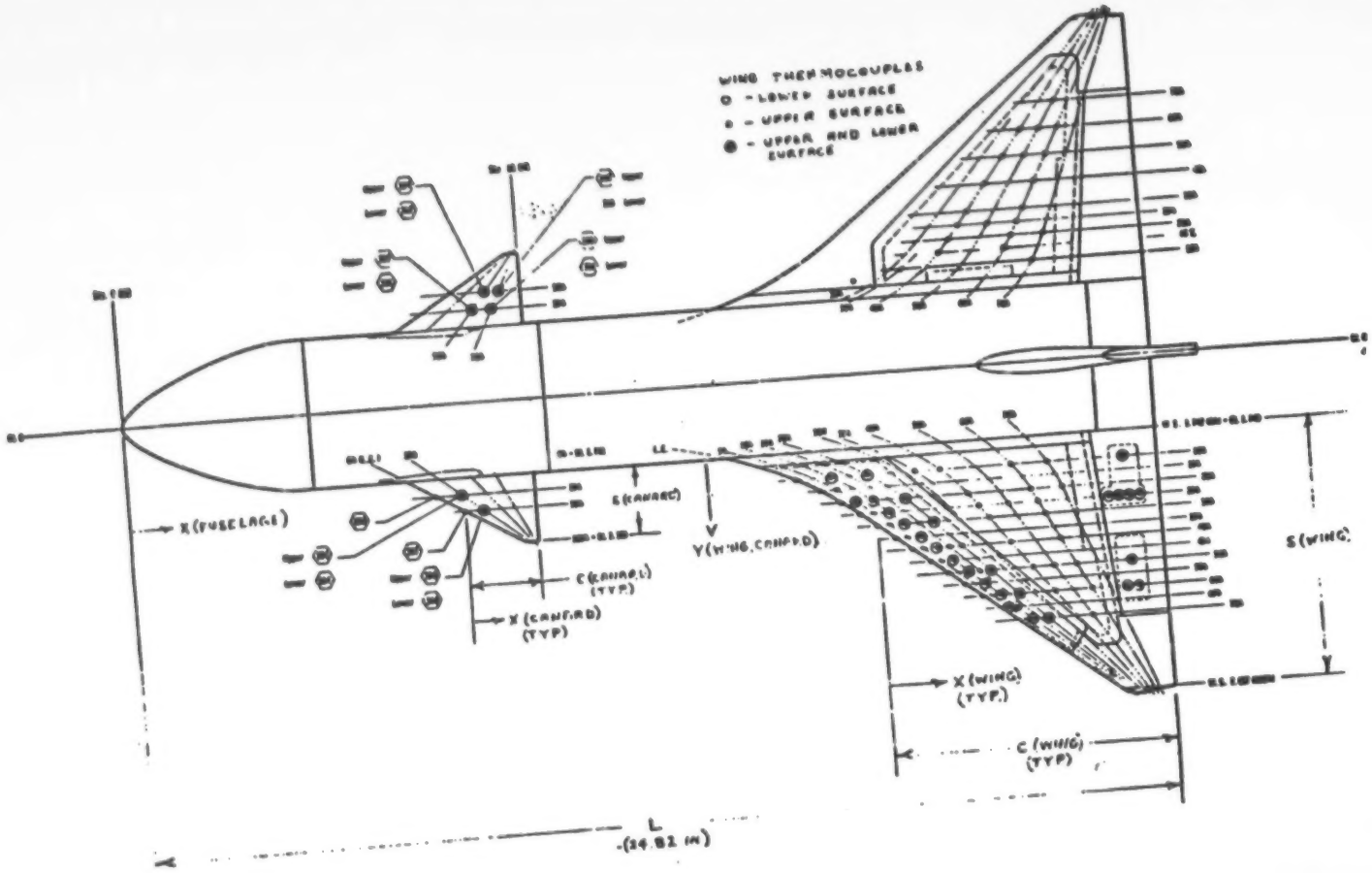

Figure 2. Continued

ORIGINAL PAGE IS
OF POOR QUALITY

ORIGINAL PAGE IS
OF POOR QUALITY

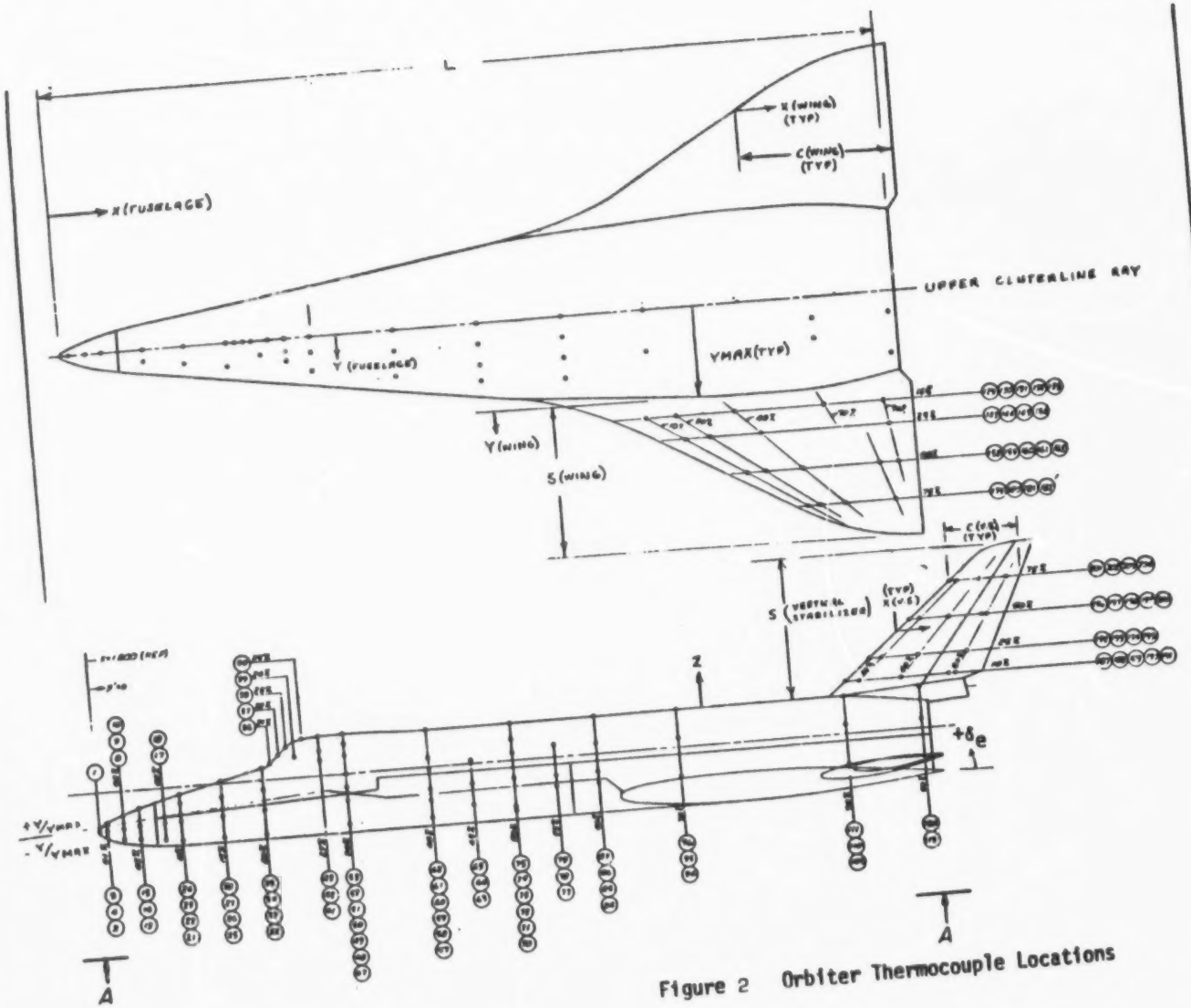

Figure 2 Orbiter Thermocouple Locations

DELTA WING BOOSTER
GD/C
DELTA WING ORBITER
NR
DR#1177-3

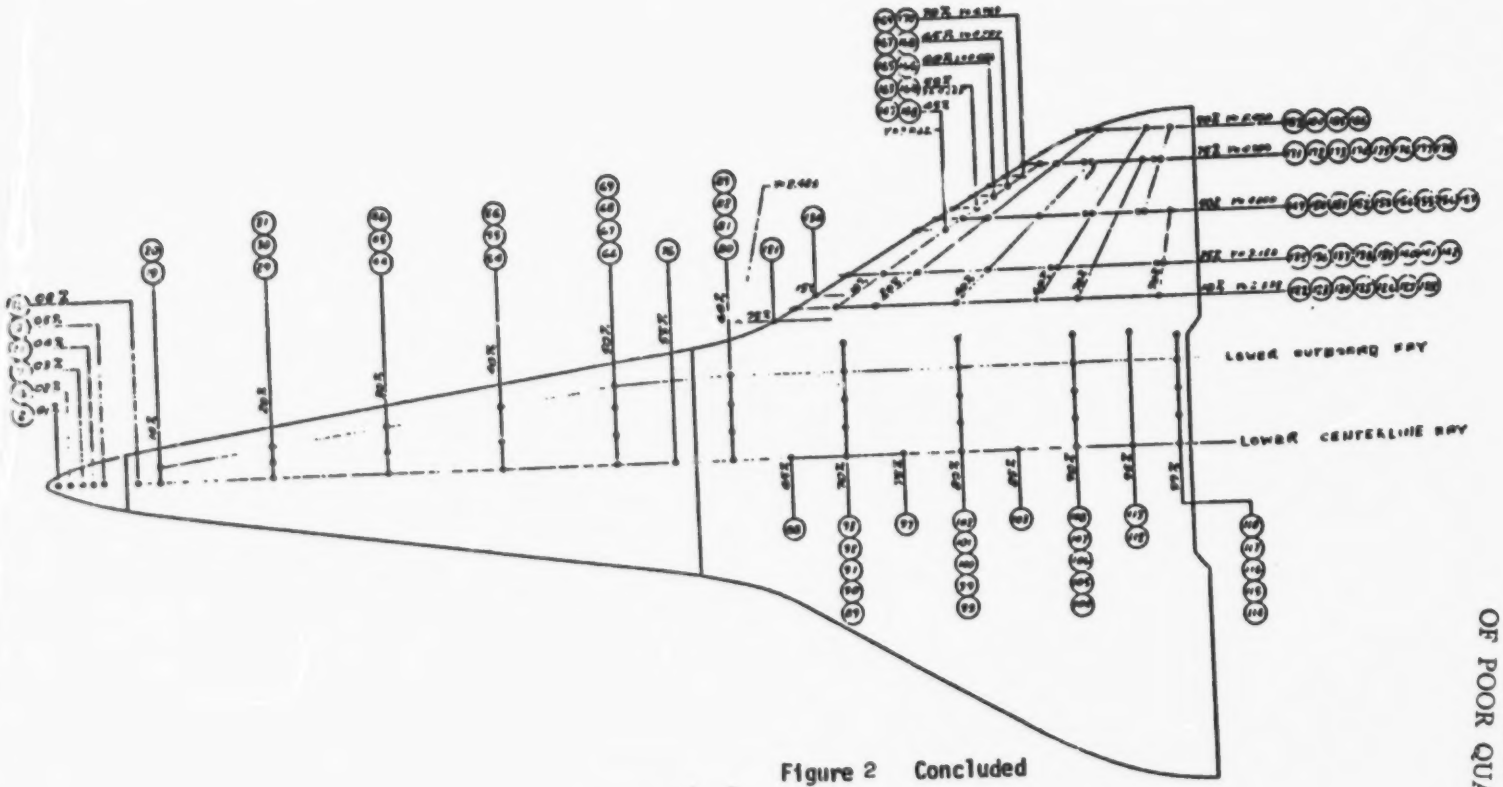

Figure 2 Concluded

VIEW A-A

ORIGINAL PAGE IS
OF POOR QUALITY

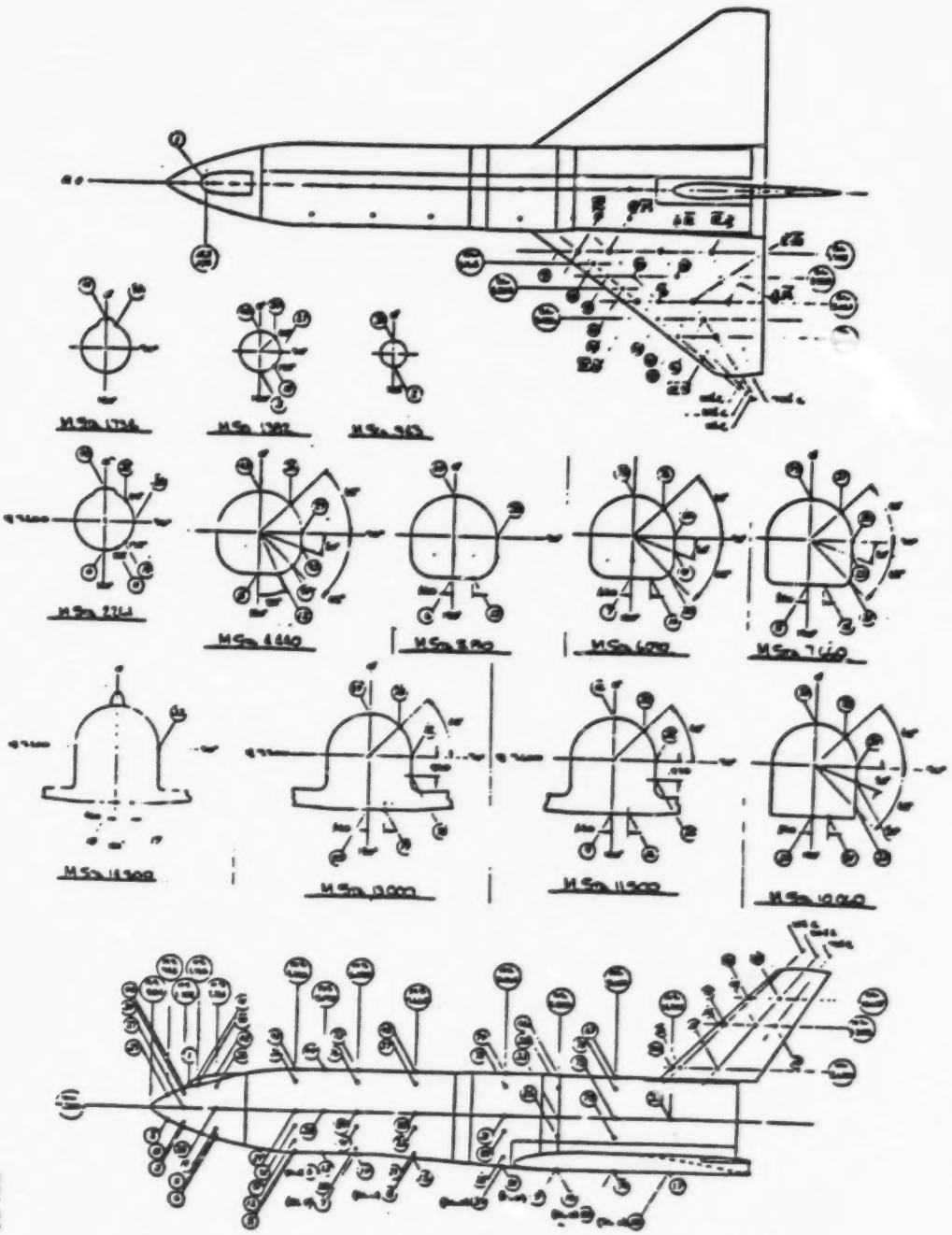

Figure 5. Thermocouples Location - Delta Wing Booster Model

DELTA WING BOOSTER
GD/C
STRAIGHT WING ORBITER
NR
DR#1098-1 C-3-19

ORIGINAL PAGE IS
OF POOR QUALITY

GD/C
STRAIGHT WING ORBITER
NR
DR#1098-2 C-3-20

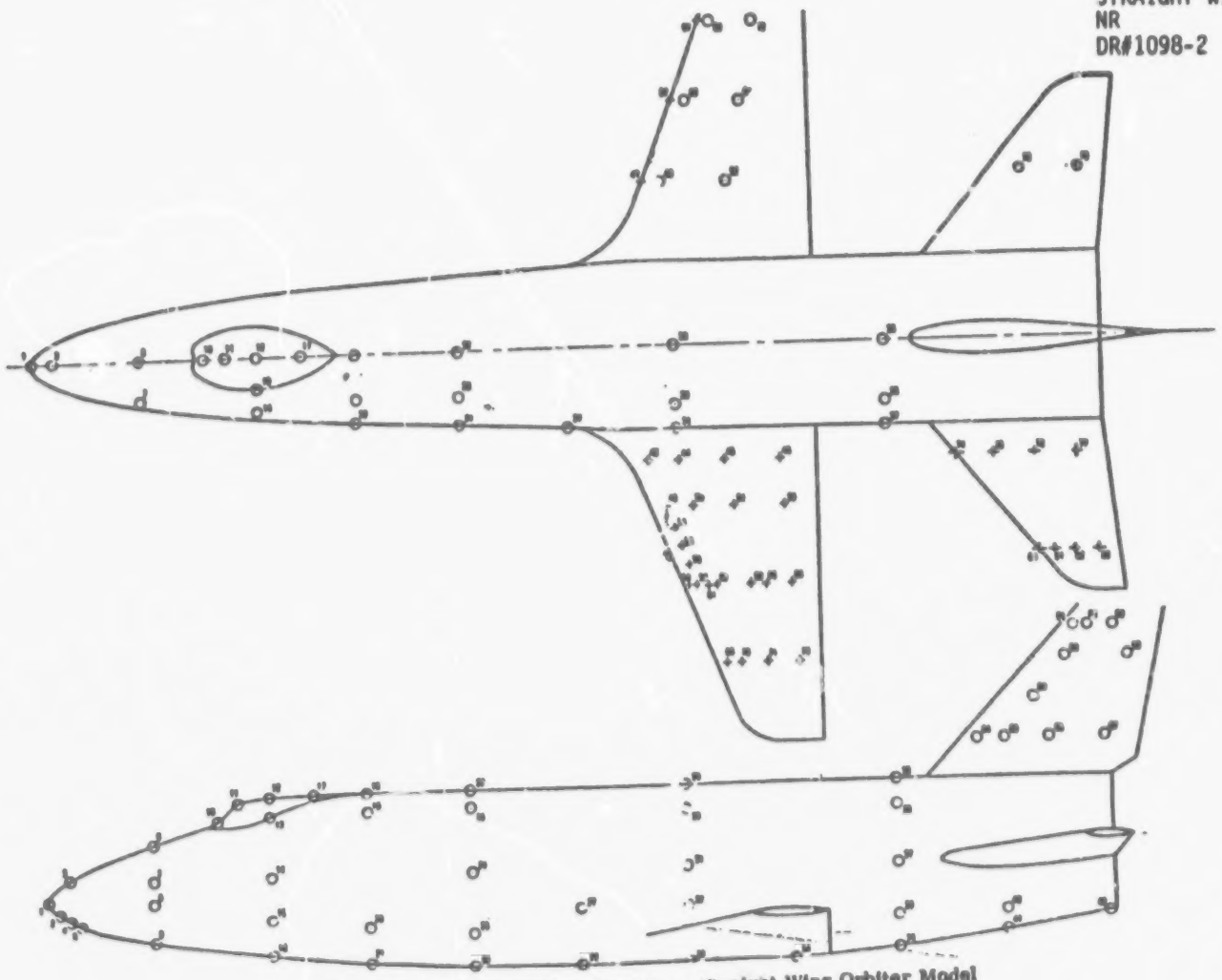

Figure 6. Thermocouples Location - Straight Wing Orbiter Model

ORIGINAL PAGE IS
OF POOR QUALITY

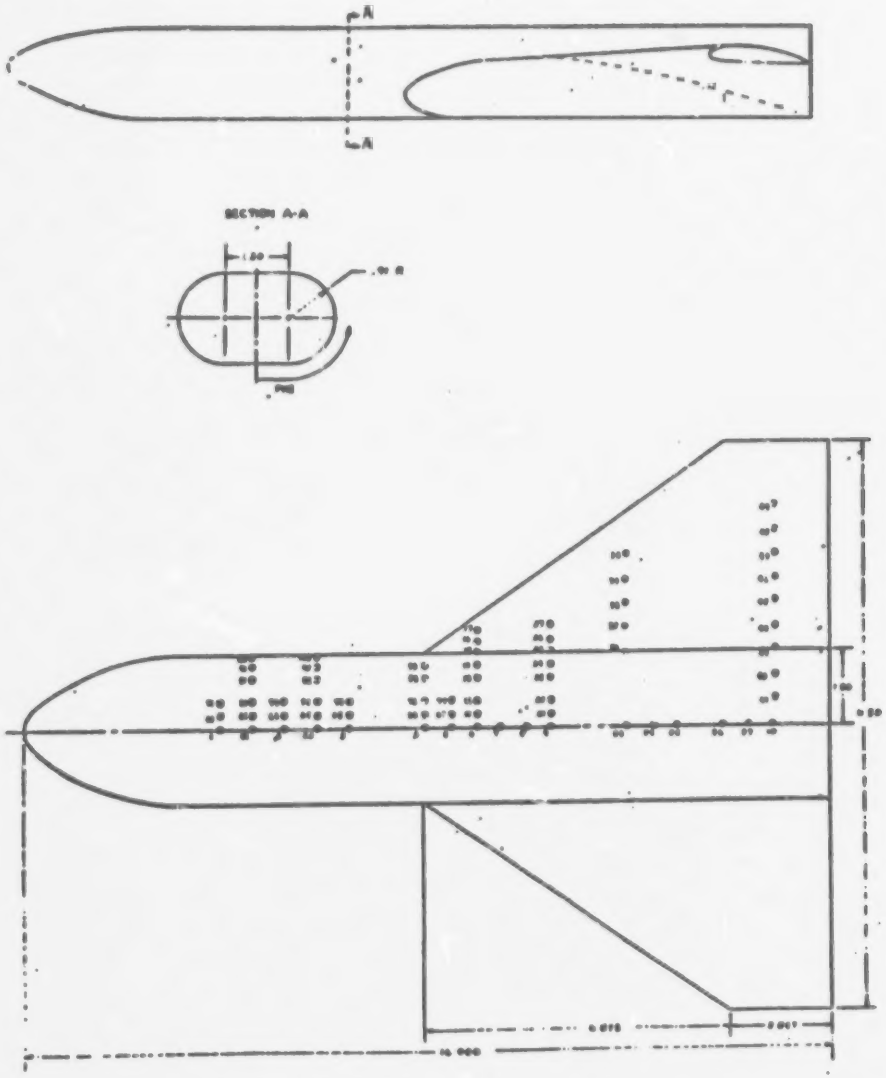

NOTE: REFER TO TABLE II FOR LOCATION DIMENSIONAL DATA.

FIGURE 2. CLIPPED WING BOOSTER AND THERMOCOUPLE LOCATION

DELTA WING BOOSTER
LARC
STRAIGHT WING ORBITER
MSC
DR#1016

C-3-21

ORIGINAL PAGE IS
OF POOR QUALITY

Standard Bibliographic Page

1. Report No.	2. Government Accession No.	3. Recipient's Catalog No.
NASA CR-4121		

4. Title and Subtitle
Space Shuttle Phase B Wind Tunnel Test Database—Summary Report

5. Report Date
March 1988

6. Performing Organization Code

7. Author(s)
J. L. Glynn and D. E. Poucher

8. Performing Organization Report No.
DMS-DB-01

9. Performing Organization Name and Address
Chrysler Corporation, Military-Public Electronic Systems
Michoud Engineering Office
P.O. Box 29200
New Orleans, Louisiana 70189

10. Work Unit No.
506-40-11-08

11. Contract or Grant No.
NAS1-18276

12. Sponsoring Agency Name and Address
National Aeronautics and Space Administration
Langley Research Center
Hampton, VA 23665-5225

13. Type of Report and Period Covered
Contractor Report

14. Sponsoring Agency Code

15. Supplementary Notes
Langley Technical Monitor: James C. Young

16. Abstract

Archived wind tunnel test data are available for flyback booster or other alternate recoverable configurations as well as reusable orbiters studied during initial development (Phase B) of the Space Shuttle. Considerable wind tunnel data were acquired by the competing contractors and the NASA centers for an extensive variety of configurations with an array of wing and body planforms.

All contractor and NASA wind tunnel test data acquired in the Phase B development have been compiled into a database and are available for applying to current winged flyback or recoverable booster aerodynamic studies.

The Space Shuttle Phase B Wind Tunnel Database is structured by vehicle component and configuration type. Basic components include the booster, the orbiter and the launch vehicle.

Booster configuration types include straight and delta wings, canard, cylindrical, retro-glide and twin body.

Orbiter configuration types include straight and delta wings, lifting body, drop tanks and double delta wings.

Launch configuration types include booster and orbiter components in various stacked and tandum combinations.

17. Key Words (Suggested by Authors(s))	18. Distribution Statement
Space Shuttle Phase B Wind Tunnel Tests Digital Database Aerodynamics Recoverable Booster	Unclassified - Unlimited Subject Category 02

19. Security Classif.(of this report)	20. Security Classif.(of this page)	21. No. of Pages	22. Price
Unclassified	Unclassified	286	A13

For sale by the National Technical Information Service, Springfield, Virginia 22161

NASA-Langley, 198